YAMAHA

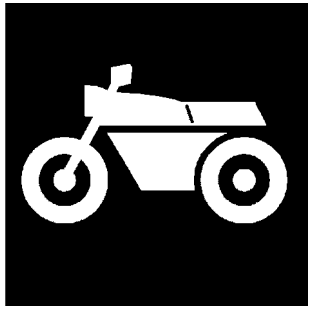

PARTS CATALOGUE
CATALOGO DE REPUESTOS

FZN150D-A (BGB1) MEXICO,PERU

YAMAHA
GENUINE
Parts & Accessories

1WBGB-200S1

( )

FZN150D-A
CATALOGO DE REPUESTOS
©2020 por Yamaha Motor Co., Ltd.
1ª edición, julio 2020
Todos los derechos reservados.
Toda reproducción o uso no autorizado
sin el consentimiento escrito de
Yamaha Motor Co., Ltd.
quedan expresamente prohibidos
Impreso en Japón.

FZN150D-A
PARTS CATALOGUE
©2020 by Yamaha Motor Co., Ltd.
1st edition, July 2020
All rights reserved.
Any reprinting or unauthorized use
without the written permission of
Yamaha Motor Co., Ltd.
is expressly prohibited.
Printed in Japan.

PROLOGO

Este catálogo de repuestos corresponde a las piezas para el o los modelos que figuran en la página de portada. Al formular el pedido de repuestos, se ruega citar este catálogo y especificar correctamente el número y el nombre de las piezas.

1. Las modificaciones y agregados que se hayan realizado después de la edición de este Catálogo de Repuestos, serán anunciados en las Informaciones de Recambios.
   Es recomendable que se hagan las correcciones necesarias en el Catálogo de Repuestos de acuerdo con las Informaciones de Recambios.

2. Abreviaciones
   En este. Catálogo de Repuestos se emplean las siguientes abreviaciones.

   “UR” Usar el número de partes especificado

   “UN” Usar la cantidad necesaria

   “AP” Piezas sustitutivas

   “LM” Fabricación local (Hay que pedir los repuestos en las cercanías)

   “F#” Nº de bastidor (Nº aplicable a la máquina)

   “O/S” Sobredimensionado

3. La cantidad de componentes para el montaje
   - Los componentes, suministrados como conjunto, se describen con un punto (.) que precede al nombre del parte como se indica a continuación.
   - La numeración que aparece a la derecha de cada descripción indica la cantidad de partes por cada unidad de conjunto.

CODIGO Nº	DESCRIPCION	CANT.	OBSERVACIONES
2F5–83310–60	ENSAMBLAJE DE LA LUZ	2	
115–83311–60	.BOMBILLA (6V–18W)	1	

4. Los colores de los componentes se indican como sigue en la columna de “OBSERVACIONES”.

CODIGO Nº	DESCRIPCION	CANT.	OBSERVACIONES
2N4–24110–00–X5	COMP. DEL TANQUE	2	MXR
3J1–24240–10	.GRAFICO, DEL TANQUE	1	PARA MXR

5. Debe tenerse en cuenta que las ilustraciones sirven como guia para la búsqueda de los números de partes y no deben usarse para el montaje. Durante el montaje, se recomienda usar el manual de taller correspondiente.

6. EL asterisco (*) antes del número de referencia indica los elementos modificados después de la primera edición.

FOREWORD

This Parts Catalogue is related to the parts for the model(s) on the cover page. When you are ordering replacement parts, please refer to this Parts Catalogue and quote both part numbers and part names correctly.

1. Modifications or additions which have been made after the issue of the Parts Catalogue will be announced in the Parts News.
   It is advisable that you make the necessary corrections to the Parts Catalogue according to the Parts News.

2. Abbreviations
   The following abbreviations are used in this Parts Catalogue.

   "UR" Use specified parts number.

   "UN" Use as many as needed.

   "AP" Alternate Parts

   "LM" Locally Made (Parts need to be ordered locally)

   "F#" Frame No. (Applicable machine No.)

   "O/S" Over Size

3. The number of components for assembly
   - Parts, which are to be supplied in an assembly, are listed with a dot (.) in front of the part name as shown below.
   - The numeral appearing to the right of each component part indicates the quantity of parts for each assembly unit.

PART NO.	DESCRIPTION	Q'TY	REMARKS
2F5–83310–60	FRONT FLASHER LIGHT ASSY	2	
115–83311–60	.BULB (6V–18W)	1	

4. Applicable colours of graphics are represented in the "REMARKS" as shown below.

PART NO.	DESCRIPTION	Q'TY	REMARKS
2N4–24110–00–X5	FUEL TANK COMP.	2	MXR
3J1–24240–10	.GRAPHIC, FUEL TANK	1	FOR MXR

5. Note that the illustrations for reference in finding parts numbers are not to be used for assembling. When assembling, please use the applicable service manual.

6. The asterisk (*) before a reference number indicates modified items after the first edition.

7. Números de serie

Nº de Serie del bastidor

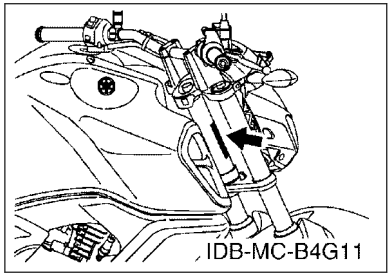

Nº de Serie del motor

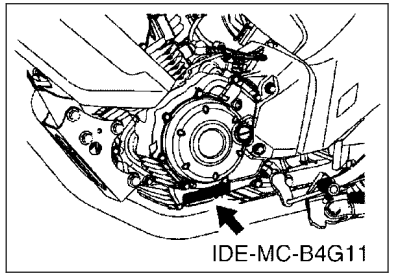

8. Códigos de color aplicables (El símbolo (*) muestra el color de modelo.)

Abreviatura	Nombre de color	Código de color
CM6	CYAN METALLIC 6	1344
MBL2(*)	MAT BLACK 2	0582
MDPBM1(*)	MAT DARK PURPLISH BLUE ME 1	1595
MNM3(*)	MAT GRAY METALLIC 3	1278
S8	SILVER 8	0895
SMX	BLACK METALLIC X	0903
VRC1(*)	VIVID RED COCKTAIL 1	0121
YB	YAMAHA BLACK	0033

9. Nº de serie inicial aplicable

Nº de Serie del bastidor

Nº de serie	Nombre de la columna de cantidades	Código de Modelo

Nº de Serie del motor

Nº de serie	Nombre de la columna de cantidades	Código de Modelo

7. Applicable Serial No.

Frame Serial No.

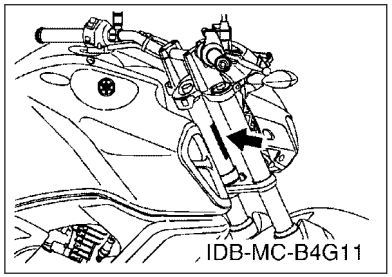

Engine Serial No.

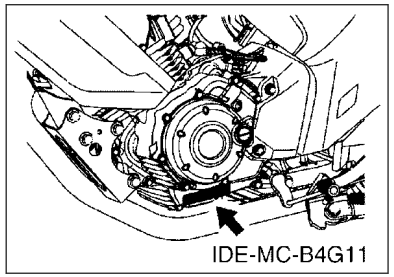

8. Applicable Colour Code (The (*) mark shows Model colour.)

Abbreviation	Colour Name	Colour Code
CM6	CYAN METALLIC 6	1344
MBL2(*)	MAT BLACK 2	0582
MDPBM1(*)	MAT DARK PURPLISH BLUE ME 1	1595
MNM3(*)	MAT GRAY METALLIC 3	1278
S8	SILVER 8	0895
SMX	BLACK METALLIC X	0903
VRC1(*)	VIVID RED COCKTAIL 1	0121
YB	YAMAHA BLACK	0033

9. Applicable Starting Serial No.

Frame Serial No.

Serial No.	Name Of Q'ty Column	Model Code

Engine Serial No.

Serial No.	Name Of Q'ty Column	Model Code

CONTENIDO

MOTOR

CILINDRO....1
CIGUENAL & PISTON....2
VALVULA....4
ARBOL DE LEVAS & CADENA....5
BOMBA DE ACEITE....6
ADMISION....7
DESCARGA....9
CARTER....10
CUBIERTA DE CARTER 1....11
EMBRAGUE DEL ARRANQUE....12
EMBRAGUE....13
TRANSMISION....15
LEVA DE CAMBIO & HORQUILLA....17
EJE DE CAMBIO & PEDAL....18

SHASIS

CUADRO....19
GUARDABARRO....20
CUBIERTA LATERAL....21
BRAZO TRASERO & SUSPENSION....23
DIRECCION....25
HORQUILLA DELANTERA....26
DEPOSITO DE COMBUSTIBLE....28
DEPOSITO DE COMBUSTIBLE 2....30
ASIENTO....33
RUEDA DELANTERA....34
CALIBRE FRENO DELANTERA....35
RUEDA TRASERA....36
CALIBRE FRENO TRASERA....38
MANILLAR & CABLE....39
CILINDRO MAESTRO DELANTERO....40
SOPORTE & APOYAPIE....42
SOPORTE & APOYAPIE 2....44
CILINDRO MAESTRO TRASERO....45
PATA PROTEGIDA....46
GENERADOR....47
MOTOR DE ARRANQUE....48
LUZ DE DESTELLADOR....49
MEDIDOR....51
FARO DELANTERO....52
LUZ DE COLA....53
INTERRUPTOR DE MANILLAR&PALANC....54
EQUIPO ELECTRICO 1....55
EQUIPO ELECTRICO 2....56
EQUIPO ELECTRICO 3....57

INDICE

INDICE NUMERICO....58

CONTENTS

ENGINE

CYLINDER....1
CRANKSHAFT & PISTON....2
VALVE....4
CAMSHAFT & CHAIN....5
OIL PUMP....6
INTAKE....7
EXHAUST....9
CRANKCASE....10
CRANKCASE COVER 1....11
STARTER CLUTCH....12
CLUTCH....13
TRANSMISSION....15
SHIFT CAM & FORK....17
SHIFT SHAFT....18

CHASSIS

FRAME....19
FENDER....20
SIDE COVER....21
REAR ARM & SUSPENSION....23
STEERING....25
FRONT FORK....26
FUEL TANK....28
FUEL TANK 2....30
SEAT....33
FRONT WHEEL....34
FRONT BRAKE CALIPER....35
REAR WHEEL....36
REAR BRAKE CALIPER....38
STEERING HANDLE & CABLE....39
FRONT MASTER CYLINDER....40
STAND & FOOTREST....42
STAND & FOOTREST 2....44
REAR MASTER CYLINDER....45
LEG SHIELD....46
GENERATOR....47
STARTING MOTOR....48
FLASHER LIGHT....49
METER....51
HEADLIGHT....52
TAILLIGHT....53
HANDLE SWITCH & LEVER....54
ELECTRICAL 1....55
ELECTRICAL 2....56
ELECTRICAL 3....57

INDEX

NUMERICAL INDEX....58

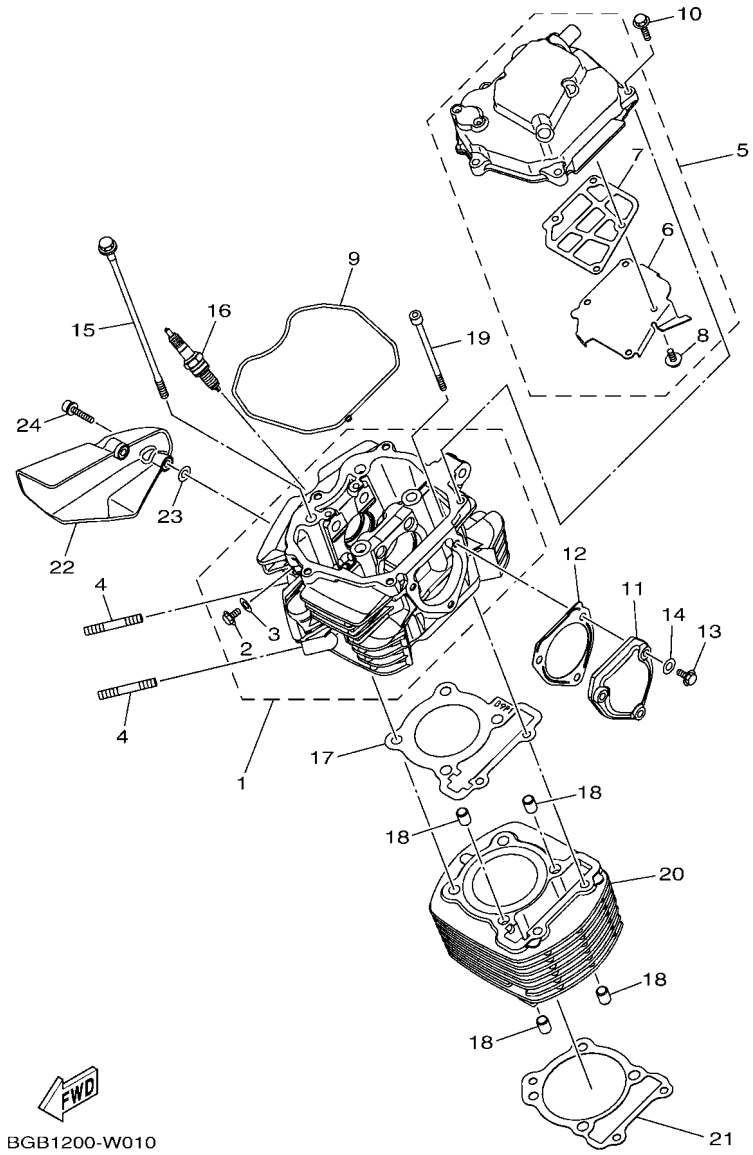

FIG. 1 CILINDRO — CYLINDER

REF. Nº	CODIGO Nº PART NO.	DESCRIPCION DESCRIPTION	BGB1					OBSERVACIONES REMARKS
1	B9P–E1102–00	CULATA DE CILINDRO COMPLETA CYLINDER HEAD ASSY	1					
2	95022–06012	.PERNO, DE BRIDA .BOLT, FLANGE	1					
3	90430–06817	.JUNTA .GASKET	1					
4	95612–08635	PERNO DE PUNTAL BOLT, STUD	2					
5	2GS–E1190–10	TAPA CULATA DE CILINDRO 1 COVER, CYLINDER HEAD 1	1					
6	2GS–E1165–00	.PLACA RESPIRADERO .PLATE, BREATHER	1					
7	2GS–E1169–00	.EMAPQ CBTA.DE RESP. .GASKET, BREATHER COVER	1					
8	90149–05807	.TORNILLO DE REGLAJE .SCREW	4					
9	2GS–E1193–20	EMPAQUE GASKET, HEAD COVER 1	1					
10	95022–06025	PERNO, DE BRIDA BOLT, FLANGE	5					
11	2GS–E1186–00	CUBIERTA CULATA CIL.LAT.2 COVER, CYLINDER HEAD SIDE 2	1					
12	2GS–E2435–10	EMPAQUE GASKET	1					
13	95022–06025	PERNO, DE BRIDA BOLT, FLANGE	3					
14	90430–06817	JUNTA GASKET	3					
15	90105–08273	TORNILLO BOLT, FLANGE	4					
16	94703–00885	BUJIA (NGK CPR8EA) PLUG, SPARK (NGK CPR8EA)	1					
17	B9P–E1181–00	JUNTA, DE CULATA 1 GASKET, CYLINDER HEAD 1	1					
18	91810–14804	PASADOR DE CLAVIJA PIN, DOWEL	4					
19	90110–06304	TORNILLO ALLEN BOLT, HEXAGON SOCKET HEAD	2					
20	B1N–E1310–00	CILINDRO CYLINDER	1					
21	21C–E1351–10	JUNTA, DE CILINDRO GASKET, CYLINDER	1					
22	21C–E2661–10	CONDUCTO DUCT	1					
23	90201–05820	ARANDELA PLANA WASHER, PLATE	2					
24	90110–06256	TORNILLO ALLEN BOLT, HEXAGON SOCKET HEAD	2					

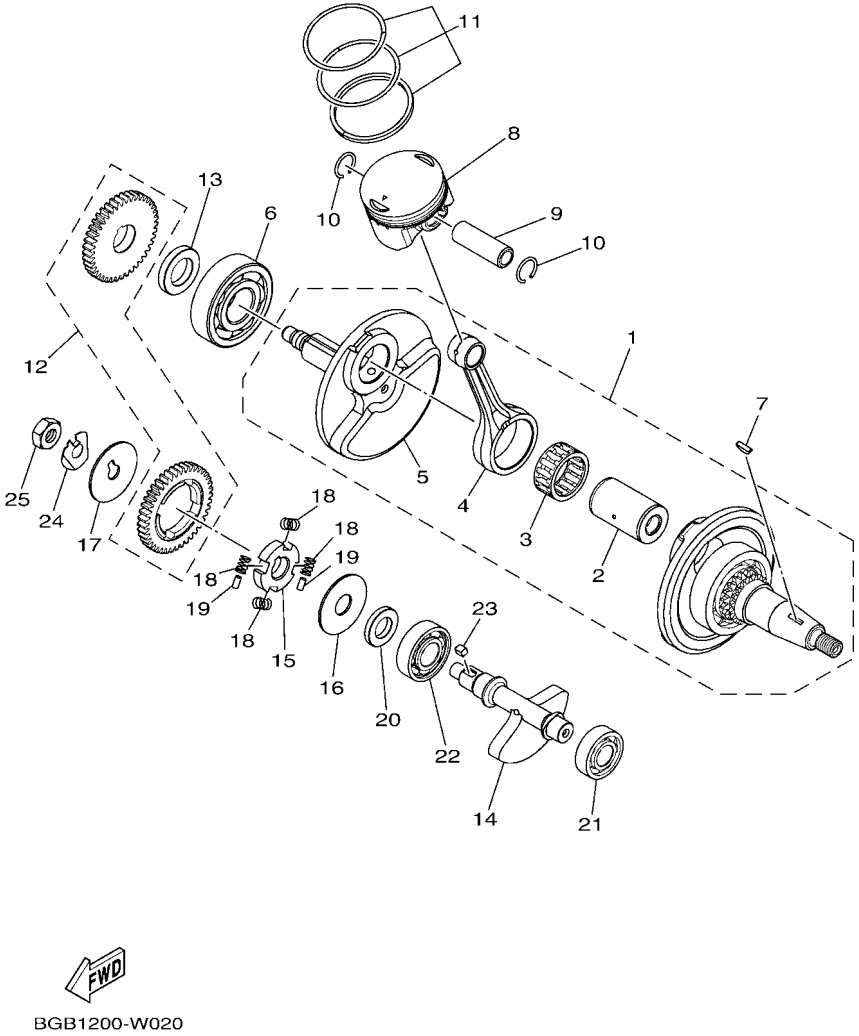

BGB1200-W020

FIG. 2 CIGUENAL & PISTON — CRANKSHAFT & PISTON

REF. Nº	CODIGO Nº PART NO.	DESCRIPCION DESCRIPTION	BGB1					OBSERVACIONES REMARKS
1	B1N–WE140–09	CIGUENAL COMPLETO CRANKSHAFT ASSY	1					
2	21C–E1681–01	.PASADOR MANIVELA 1 .PIN, CRANK 1	1					
3	93310–628X0	.COJINETE DE RODILLOS .BEARING	1					
4	2GS–E1651–10	.BIELA .ROD, CONNECTING	1					
5	B1N–E1422–00	.MANIVELA 2 .CRANK 2	1					
6	93306–355Y6	COJINETE BEARING	1					
7	90280–03017	CUNA WOODRUFF KEY, WOODRUFF	1					
8	2GS–E1631–00	PISTON (NORMA) PISTON (STD)	1					
	2GS–E1636–09	PISTON (0.50MM O/S) PISTON (0.50MM O/S)	1					AP AP
	2GS–E1638–09	PISTON (1.00MM O/S) PISTON (1.00MM O/S)	1					AP AP
9	21C–E1633–00	PASADOR, PISTON PIN, PISTON	1					
10	93450–16812	SEGURO CIRCLIP	2					
11	2GS–E1603–00	JUEGO DE ANILLOS (NORMA) PISTON RING SET (STD)	1					
	2GS–E1605–00	JUEGO DE ANILLOS (0.50MM O/S) PISTON RING SET (0.50MM O/S)	1					AP AP
	2GS–E1607–00	JUEGO DE ANILLOS (1.00MM O/S) PISTON RING SET (1.00MM O/S)	1					AP AP
12	B9P–WE153–00	ENGRANAJE TRACCION DRIVEN GEAR COMP.	1					
13	90387–20813	ESPACIADOR COLLAR	1					
14	2GS–E1454–01	PESO 1 WEIGHT 1	1					
15	B9P–E1496–00	COPA TOPE BOSS, BUFFER	1					
16	90201–15022	ARANDELA PLANA WASHER, PLATE	1					
17	90214–10006	ARANDELA DE POSICION WASHER, CLAW	1					
18	54B–E1476–00	RESORTE SPRING	4					
19	21C–E3362–00	RODILLO PIN DOWEL 1	2					
20	90387–15840	ESPACIADOR COLLAR	1					
21	93306–202YD	COJINETE BEARING	1					
22	93306–203XS	COJINETE BEARING	1					
23	90282–05031	CHAVETA, RECTA KEY, STRAIGHT	1					

FIG. 2 CIGUENAL & PISTON — CRANKSHAFT & PISTON

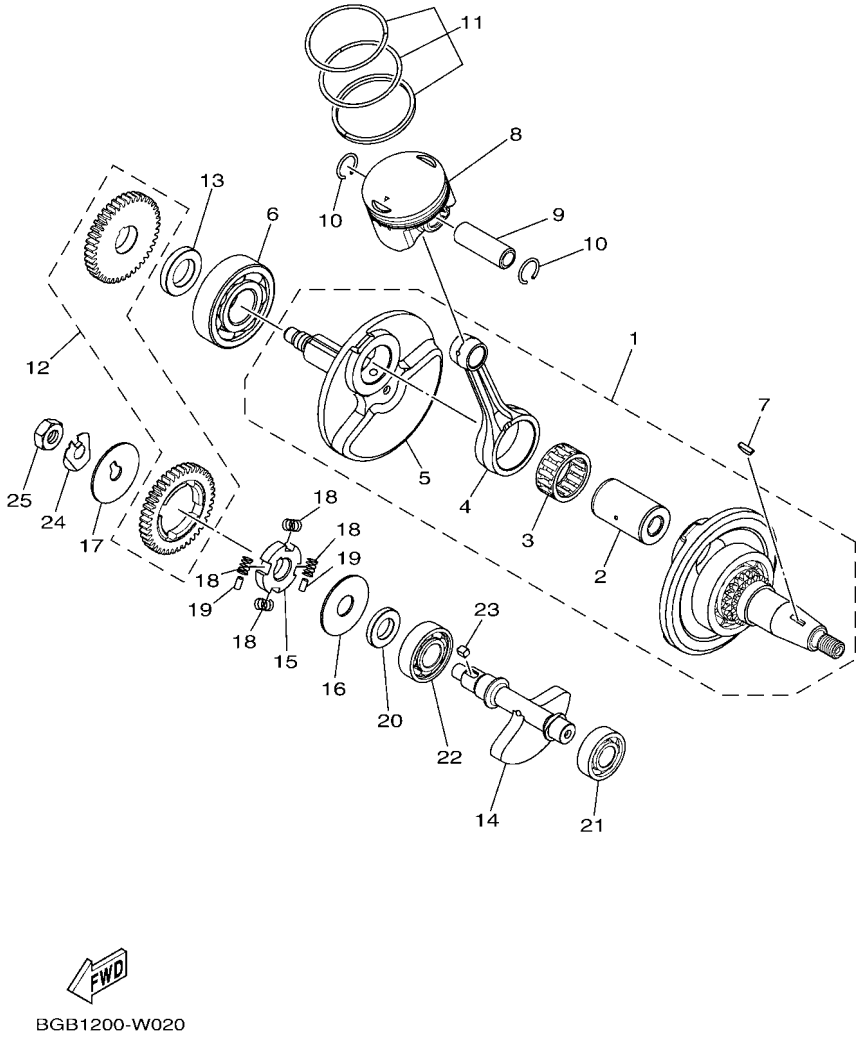

REF. Nº	CODIGO Nº PART NO.	DESCRIPCION DESCRIPTION	BGB1					OBSERVACIONES REMARKS
24	90215–10803	ARANDELA DE CIERRE WASHER, LOCK	1					
25	90170–10012	TUERCA NUT	1					

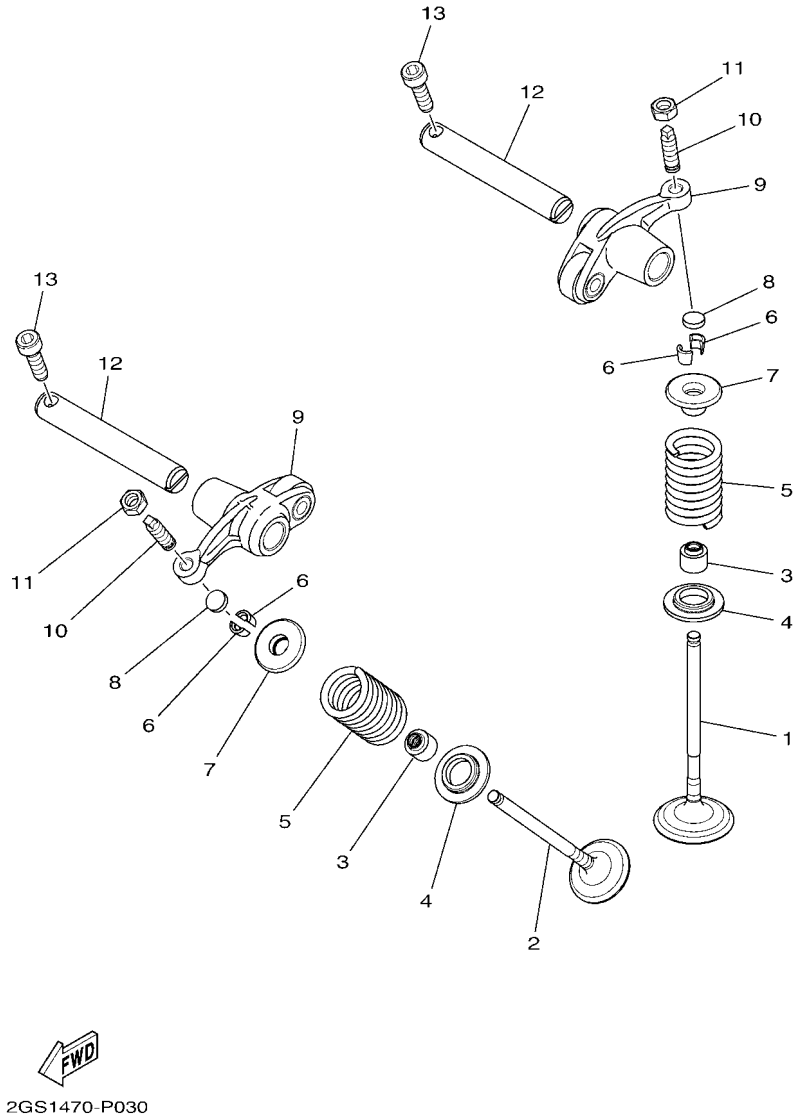

FIG. 3 VALVULA — VALVE

REF. Nº	CODIGO Nº PART NO.	DESCRIPCION DESCRIPTION	BGB1					OBSERVACIONES REMARKS
1	2GS–E2111–00	VALVULA DE ADMISION VALVE, INTAKE	1					
2	2GS–E2121–00	VALVULA DE ESCAPE VALVE, EXHAUST	1					
3	38B–E2119–00	SELLO DE ACEITE VALVULA SEAL, VALVE STEM	2					
4	2GS–E2126–00	ASIENTO RESORTE DE VALVULA2 SEAT, VALVE SPRING 2	2					
5	2GS–E2113–10	RESORTE VALVULA INTERNA SPRING, VALVE INNER	2					
6	3S0–E2118–00	SEGURO DE VALVULA LOCK, VALVE SPRING RETAINER	4					
7	2UP–E2117–00	RETEN RESORTE DE VALVULA RETAINER, VALVE SPRING	2					
8	52S–E2169–10	DISCO DE AJUSTE PAD, ADJUSTING	2					
9	1ST–E2151–00	BRAZO DE BALANCIN DE VALVULA ARM, VALVE ROCKER	2					
10	2GS–E2159–00	TORNILLO DE AJUSTE DE VALVULA SCREW, VALVE ADJUSTING	2					
11	90170–05302	TUERCA NUT	2					
12	21C–E2156–00	EJE DE BALANCIN SHAFT, ROCKER 2	2					
13	91312–05016	TORNILLO ALLEN BOLT, HEXAGON SOCKET HEAD	2					

FIG. 4 ARBOL DE LEVAS & CADENA — CAMSHAFT & CHAIN

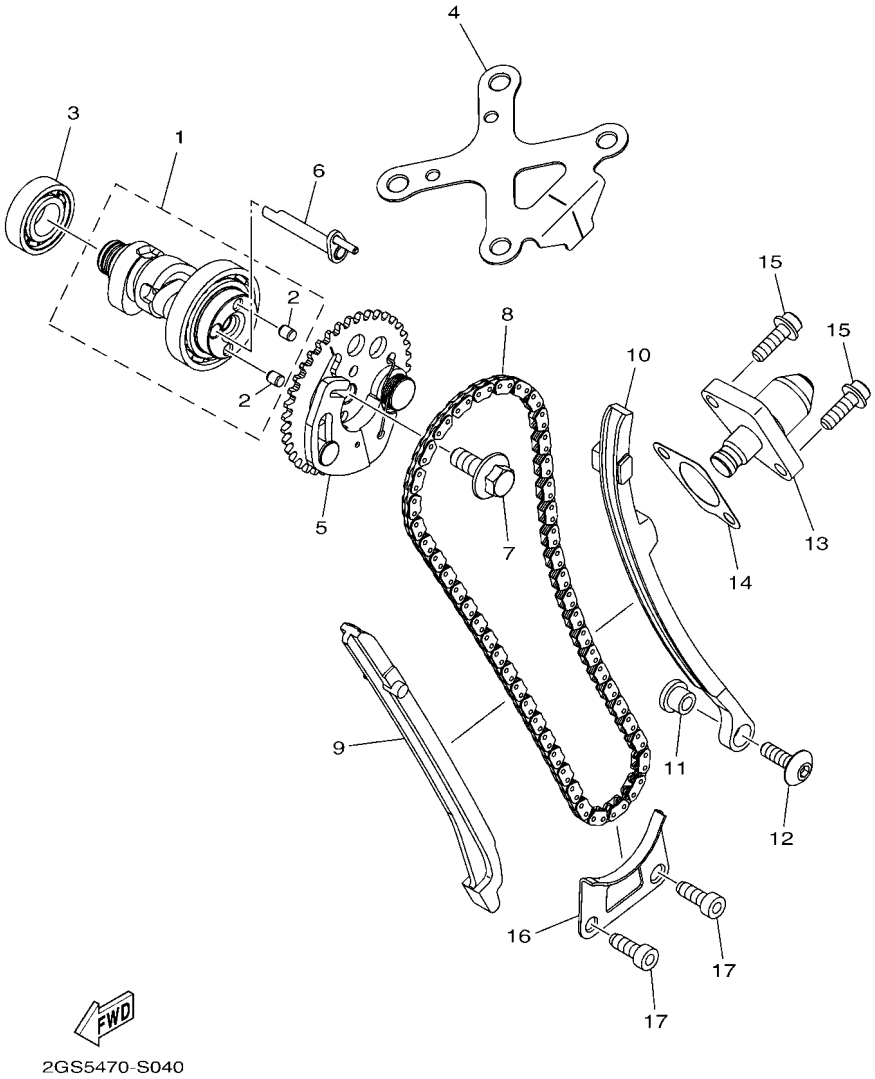

REF. Nº	CODIGO Nº PART NO.	DESCRIPCION DESCRIPTION	BGB1					OBSERVACIONES REMARKS
1	2GS–E2170–00	ARBOL DE LEVAS COMPLETO 1 CAMSHAFT ASSY 1	1					
2	93605–06800	.PASADOR DE CLAVIJA .PIN, DOWEL	2					
3	93306–002XJ	COJINETE BEARING	1					
4	2GS–E111F–00	PLACA PLATE	1					
5	2GS–E2280–00	EQUIPO DE DESCOMPRESION DECOMPRESSION ASSY	1					
6	1PM–E2288–01	LEVA DE DESCOMPRESION CAM, DECOMPRESSION	1					
7	90105–08196	TORNILLO BOLT, FLANGE	1					
8	94568–G2096	CADENA CHAIN	1					
9	21C–E2231–00	TOPE DE GUIA 1 GUIDE, STOPPER 1	1					
10	2GS–E2241–00	TOPE DE GUIA 2 GUIDE, STOPPER 2	1					
11	4LS–E5598–00	COLLAR COLLAR	1					
12	90149–06829	TORNILLO DE REGLAJE SCREW	1					
13	21C–E2210–02	TENSOR CADENA DE LEVA TENSIONER ASSY, CAM CHAIN	1					
14	B44–E2213–00	EMPAQUE DE CAJA TENSOR GASKET, TENSIONER CASE	1					
15	90110–06393	TORNILLO ALLEN BOLT, HEXAGON SOCKET HEAD	2					
16	21C–E2437–00	TOPE STOPPER	1					
17	91312–06014	TORNILLO ALLEN BOLT, HEXAGON SOCKET HEAD	2					

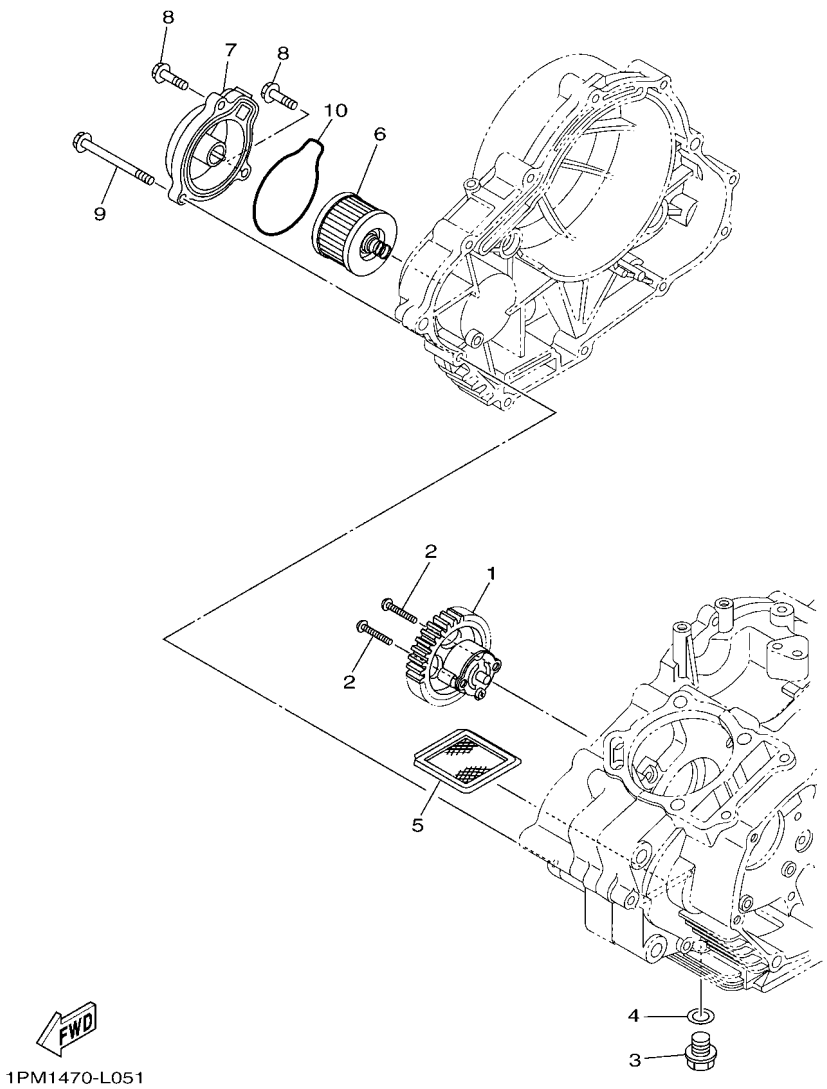

FIG. 5 BOMBA DE ACEITE — OIL PUMP

REF. Nº	CODIGO Nº PART NO.	DESCRIPCION DESCRIPTION	BGB1					OBSERVACIONES REMARKS
1	54B–E3300–00	BOMBA DE ACEITE COMPLETA OIL PUMP ASSY	1					
2	90111–05035	TORNILLO BOLT,HEX. SOCKET BUTTON	2					
3	90340–12808	TORNILLO, DE DRENAJE PLUG, STRAIGHT SCREW	1					
4	90430–12227	JUNTA GASKET	1					
5	4LS–E3411–00	FILTRO DE ACEITE STRAINER, OIL	1					
6	21C–E3440–00	ELEMENTO FILTRO DE ACEITE ELEMENT ASSY, OIL CLEANER	1					
7	21C–E3447–00	TAPA DEL ELEMENTO COVER, OIL ELEMENT	1					
8	95022–06020	PERNO, DE BRIDA BOLT, FLANGE	2					
9	95022–06065	PERNO, DE BRIDA BOLT, FLANGE	1					
10	21C–E3449–00	JUNTA DE TAPA DE ELEMENTO GASKET, ELEMENT COVER	1					

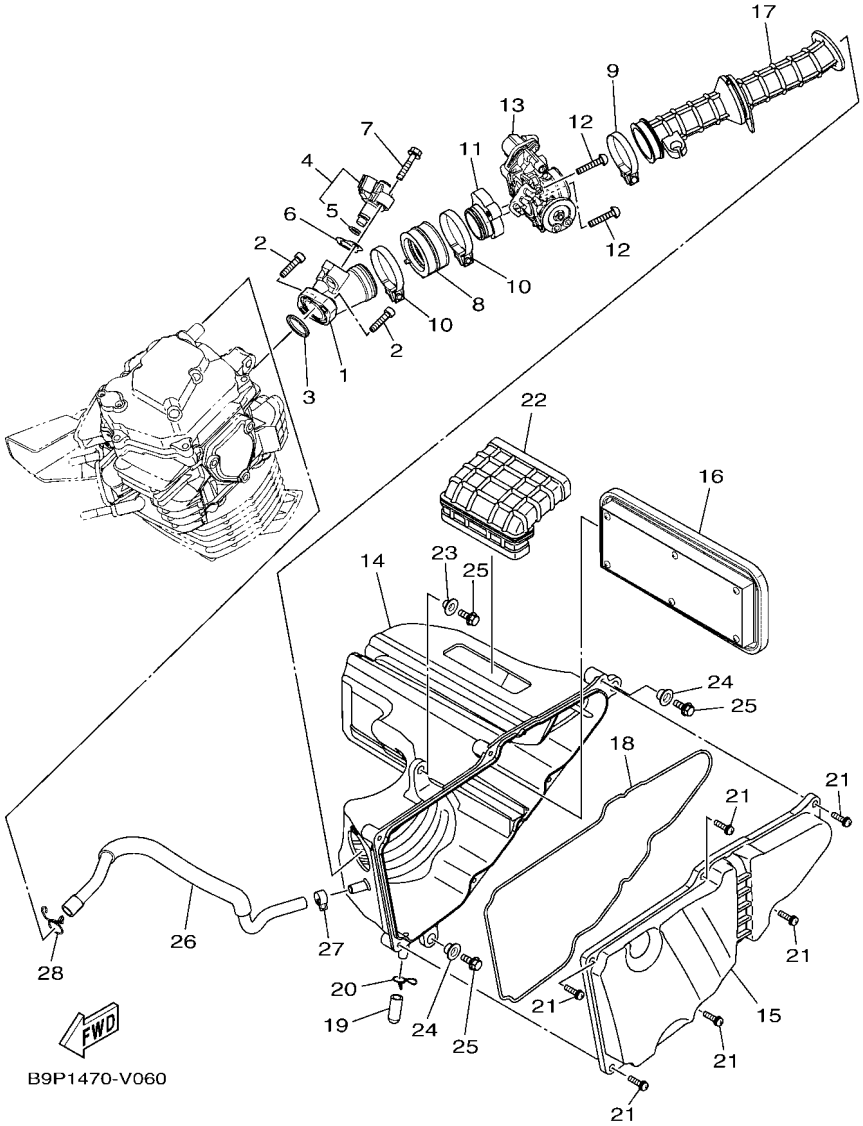

FIG. 6 ADMISION INTAKE

REF. Nº	CODIGO Nº PART NO.	DESCRIPCION DESCRIPTION	BGB1					OBSERVACIONES REMARKS
1	B9P–E3585–00	MULTIPLE MANIFOLD	1					
2	91312–06025	TORNILLO ALLEN BOLT, HEXAGON SOCKET HEAD	2					
3	2GS–E3645–00	EMPAQUE GASKET, MANIFOLD 1	1					
4	B9P–E3770–00	INYECTOR INJECTOR ASSY	1					
5	B7J–E4147–10	.ANILLO O .O-RING	1					
6	2GS–E3557–00	EMPAQUE GASKET	1					
7	95812–06030	TORNILLO DE REBORDE BOLT, FLANGE	1					
8	2GS–E3635–00	JUNTA DE ADMISION 1 JOINT, INTAKE 1	1					
9	90450–43808	BRIDA, MANGUERA HOSE CLAMP ASSY	1					
10	90450–48807	BRIDA, MANGUERA HOSE CLAMP ASSY	2					
11	B9P–E3636–00	UNION,ADMISION 2 JOINT, INTAKE 2	1					
12	92012–06025	PERNO BOLT, BUTTON HEAD	2					
13	B9P–E3750–00	CAJA DE ACELERADOR COMPL. THROTTLE BODY ASSY	1					
14	2GS–E4411–00	CAJA FILTRO DEL AIRE 1 CASE, AIR CLEANER 1	1					
15	B9P–E4412–00	TAPA CAJA DEL FILTRO 1 CAP, CLEANER CASE 1	1					
16	2GS–E4450–00	ELEMENTO COMP.FILTRO DE AIRE ELEMENT ASSY, AIR CLEANER	1					
17	B9P–E4453–00	UNION DEL FILTRO DEL AIRE 1 JOINT, AIR CLEANER 1	1					
18	2GS–E4452–00	SELLO SEAL	1					
19	20P–E443E–00	TUBO, DRENAJE PIPE, DRAIN	1					
20	90467–12800	PRESILLA CLIP	1					
21	97602–05320	TORNILLO CON RONDONA SCREW, PAN HEAD WITH WASHER	6					
22	2GS–E4437–00	CONDUCTO DUCT	1					
23	90387–06737	ESPACIADOR COLLAR	1					
24	90387–09806	ESPACIADOR COLLAR	2					
25	95822–06016	TORNILLO DE REBORDE BOLT, FLANGE	3					
26	2GS–E1166–10	TUBO RESPIRADERO 1 PIPE, BREATHER 1	1					
27	90467–13816	PRESILLA CLIP	1					

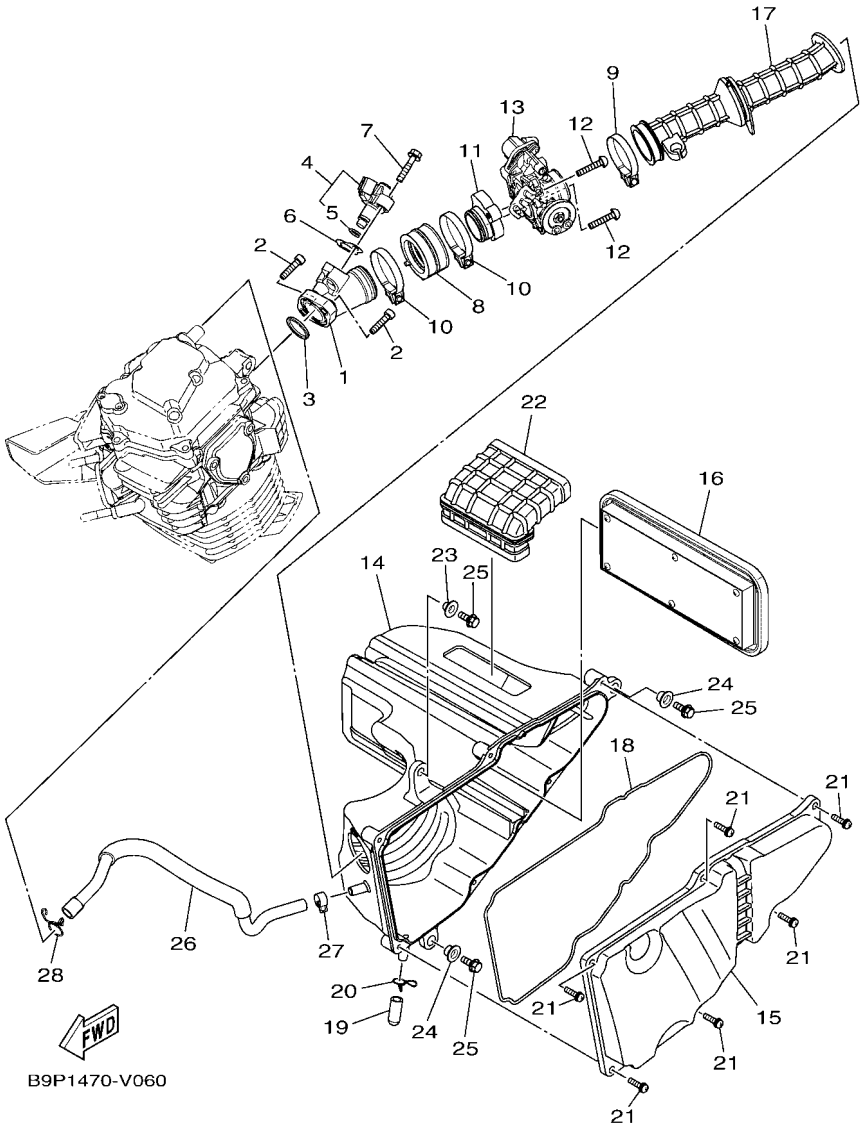

FIG. 6 ADMISION INTAKE

REF. Nº	CODIGO Nº PART NO.	DESCRIPCION DESCRIPTION	BGB1					OBSERVACIONES REMARKS
28	90467–15012	PRESILLA CLIP	1					

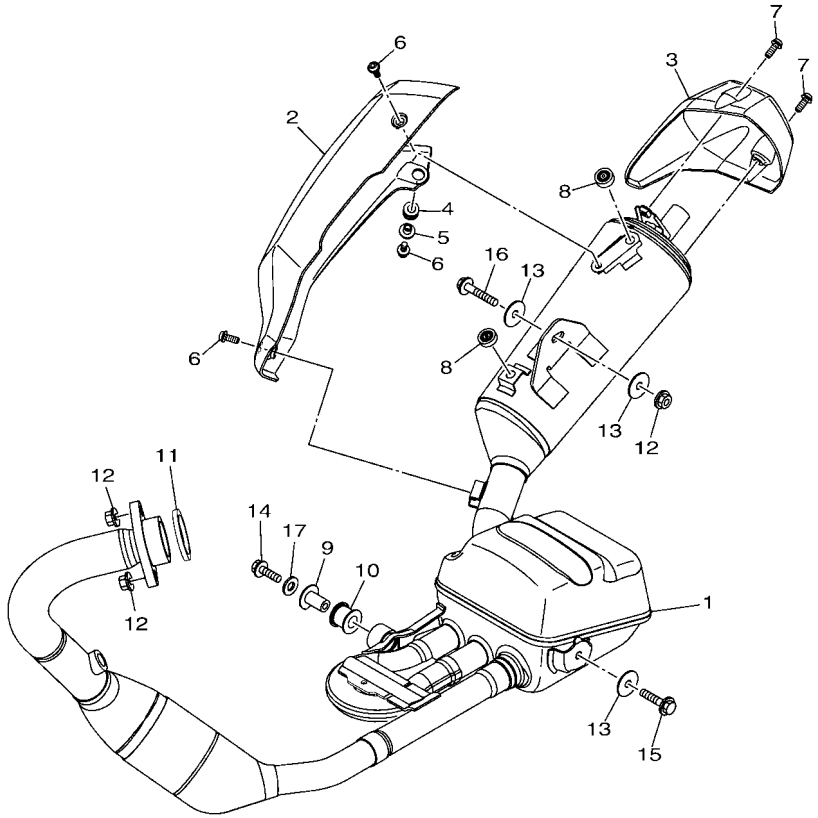

B9P1470-V070

FIG. 7 DESCARGA — EXHAUST

REF. Nº	CODIGO Nº PART NO.	DESCRIPCION DESCRIPTION	BGB1					OBSERVACIONES REMARKS
1	B9P–E4703–00	SILENCIADOR COMPL. 1 MUFFLER COMP. 1	1					
2	B4G–E4718–00	PROTECTOR DE SILENCIADOR 1 PROTECTOR, MUFFLER 1	1					
3	B4G–E4799–00	TAPA CAP	1					
4	90480–12812	TAPON GROMMET	1					
5	90387–087L0	ESPACIADOR COLLAR	1					
6	90111–06807	TORNILLO BOLT,HEX. SOCKET BUTTON	3					
7	90111–06864	TORNILLO BOLT,HEX. SOCKET BUTTON	2					
8	54B–E4757–00	AMORTIGUADOR SILENCIADOR 2 DAMPER, MUFFLER 2	2					
9	21C–E4775–00	TUERCA NUT	1					
10	20P–E4747–00	AMORTIGUADOR DE SILENCIADOR DAMPER, MUFFLER	1					
11	21C–E4613–00	JUNTA, TUBO DE ESCAPE GASKET, EXHAUST PIPE	1					
12	95702–08500	TUERCA DE BRIDA NUT, FLANGE	3					
13	90201–08880	ARANDELA PLANA WASHER, PLATE	3					
14	95802–08025	TORNILLO DE REBORDE BOLT, FLANGE	1					
15	95812–08035	TORNILLO DE REBORDE BOLT, FLANGE	1					
16	95812–08040	TORNILLO DE REBORDE BOLT, FLANGE	1					
17	90201–08881	ARANDELA PLANA WASHER, PLATE	1					

FIG. 8 CARTER — CRANKCASE

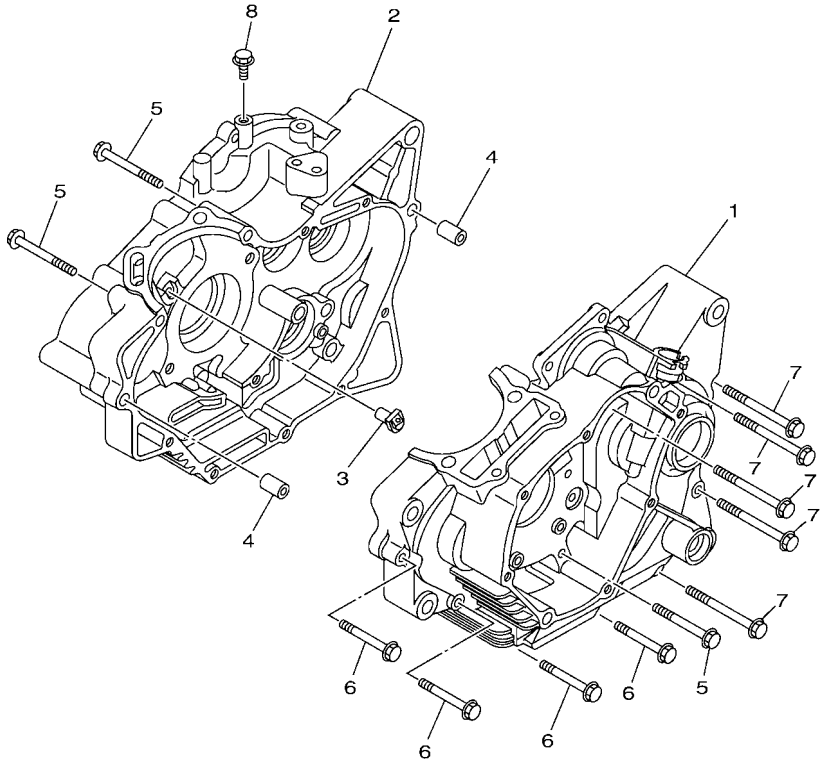

B9P1470-V080

REF. Nº	CODIGO Nº PART NO.	DESCRIPCION DESCRIPTION	BGB1					OBSERVACIONES REMARKS
1	B1N–E5111–01	CARTER MANIVELA 1 CRANKCASE 1	1					
2	B1N–E5121–01	CARTER MANIVELA 2 CRANKCASE 2	1					
3	21C–E5155–00	BOQUILLA 3 NOZZLE 3	1					
4	91830–21014	PASADOR DE CLAVIJA PIN, DOWEL	2					
5	95022–06055	PERNO, DE BRIDA BOLT, FLANGE	3					
6	95022–06045	PERNO, DE BRIDA BOLT, FLANGE	4					
7	95022–06070	PERNO, DE BRIDA BOLT, FLANGE	5					
8	95802–06010	TORNILLO DE REBORDE BOLT, FLANGE	1					

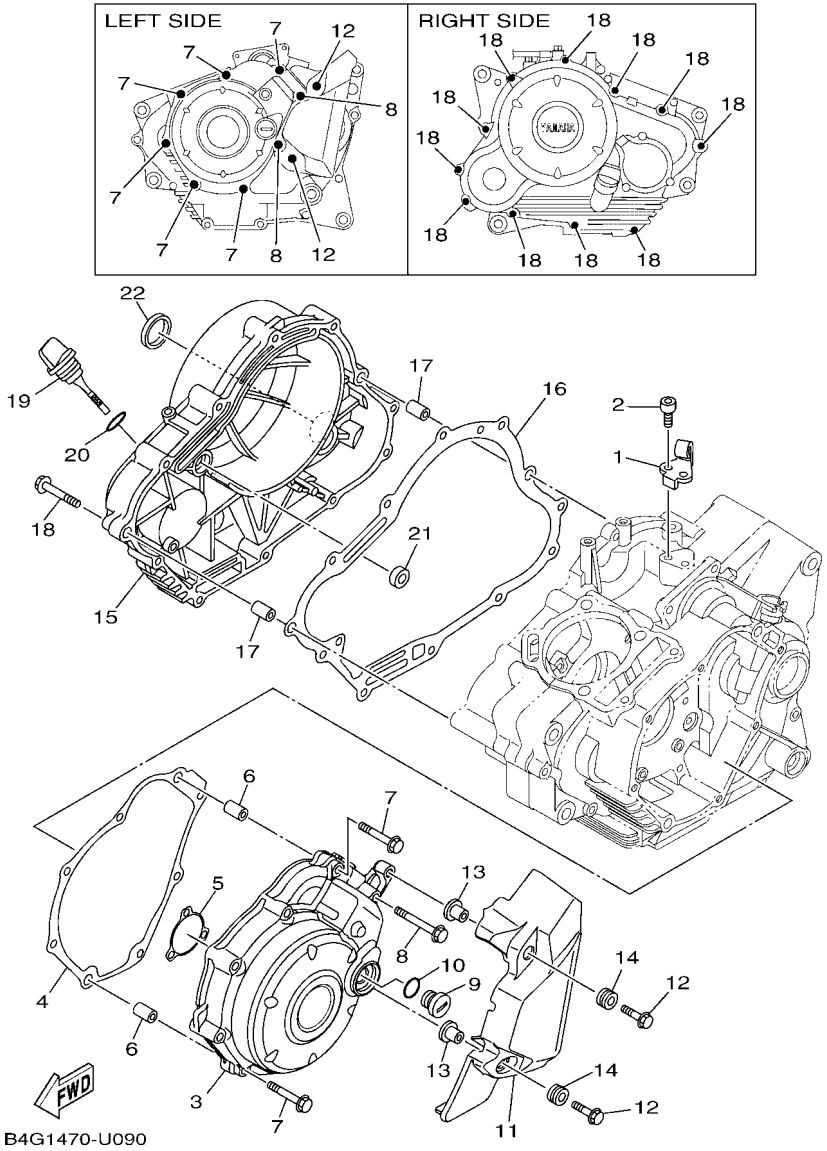

FIG. 9 CUBIERTA DE CARTER 1 — CRANKCASE COVER 1

REF. Nº	CODIGO Nº PART NO.	DESCRIPCION DESCRIPTION	BGB1					OBSERVACIONES REMARKS
1	21C–E5441–00	SOSTEN DE CABLE DE EMBRAGUE HOLDER, CLUTCH CABLE	1					
2	91312–06014	TORNILLO ALLEN BOLT, HEXAGON SOCKET HEAD	2					
3	2GS–E5411–10	CUBIERTA DE CARTER 1 COVER, CRANKCASE 1	1					
4	2GS–E5451–00	EMPAQ DE CUBIERTA DE CARTER GASKET, CRANKCASE COVER 1	1					
5	45P–E5353–00	JUNTA DE DRENAJE GASKET, DRAIN	1					
6	91830–21014	PASADOR DE CLAVIJA PIN, DOWEL	2					
7	95022–06040	PERNO, DE BRIDA BOLT, FLANGE	6					
8	95022–06050	PERNO, DE BRIDA BOLT, FLANGE	2					
9	90340–14117	TORNILLO, DE DRENAJE PLUG, STRAIGHT SCREW	1					
10	93210–14899	ANILLO O O-RING	1					
11	B4G–E5418–00	CUBIERTA CAJA DE CADENA COVER, CHAIN CASE	1					
12	95802–06020	TORNILLO DE REBORDE BOLT, FLANGE	2					
13	90387–068C9	ESPACIADOR COLLAR	2					
14	90480–12812	TAPON GROMMET	2					
15	B1N–E5421–00	TAPA DE CARTER DERECHA COVER, CRANKCASE 2	1					
16	2GS–E5461–00	JUNTA TAPA CARTER DERECHO 2 GASKET, CRANKCASE COVER 2	1					
17	91830–21014	PASADOR DE CLAVIJA PIN, DOWEL	2					
18	95022–06040	PERNO, DE BRIDA BOLT, FLANGE	11					
19	54B–E5362–00	TAPON DEL NIVEL DE ACEITE PLUG, OIL LEVEL	1					
20	93210–19809	ANILLO O O-RING	1					
21	93101–10838	SELLO ACEITE OIL SEAL	1					
22	90338–30802	TAPON PLUG	1					

FIG. 10 EMBRAGUE DEL ARRANQUE — STARTER CLUTCH

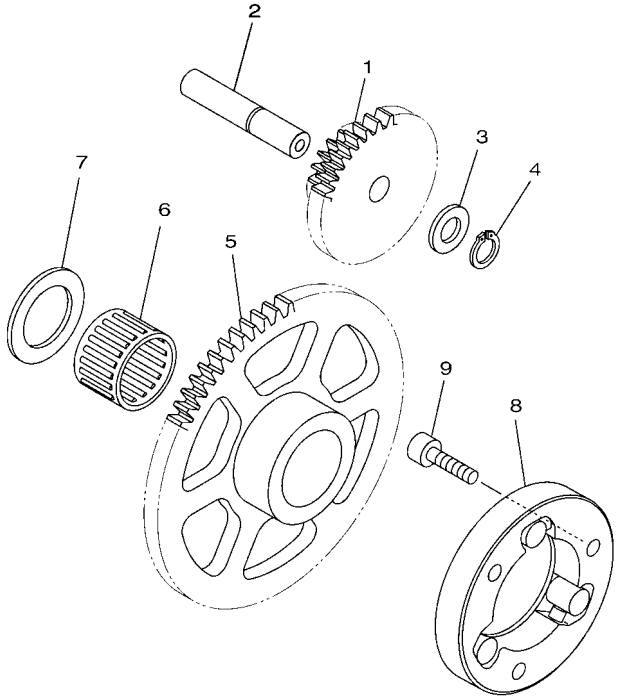

2GSA470-T100

REF. Nº	CODIGO Nº PART NO.	DESCRIPCION DESCRIPTION	BGB1					OBSERVACIONES REMARKS
1	2GS–E5514–01	ENGRANAJE 2 GEAR 2	1					
2	21C–E5521–00	EJE 1 SHAFT 1	1					
3	90201–105E8	ARANDELA PLANA WASHER, PLATE	1					
4	99009–10400	PRESILLA REDONDA CIRCLIP	1					
5	1PM–E5524–10	RUEDA DE ARRANQUE WHEEL, STARTER	1					
6	93310–325X3	COJINETE DE RODILLOS BEARING	1					
7	90201–25290	ARANDELA PLANA WASHER, PLATE	1					
8	2GS–E5580–10	ENSAMBLE EXT.EMBRAGUE ARRANQUE STARTER CLUTCH OUTER ASSY	1					
9	91312–06020	TORNILLO ALLEN BOLT, HEXAGON SOCKET HEAD	3					

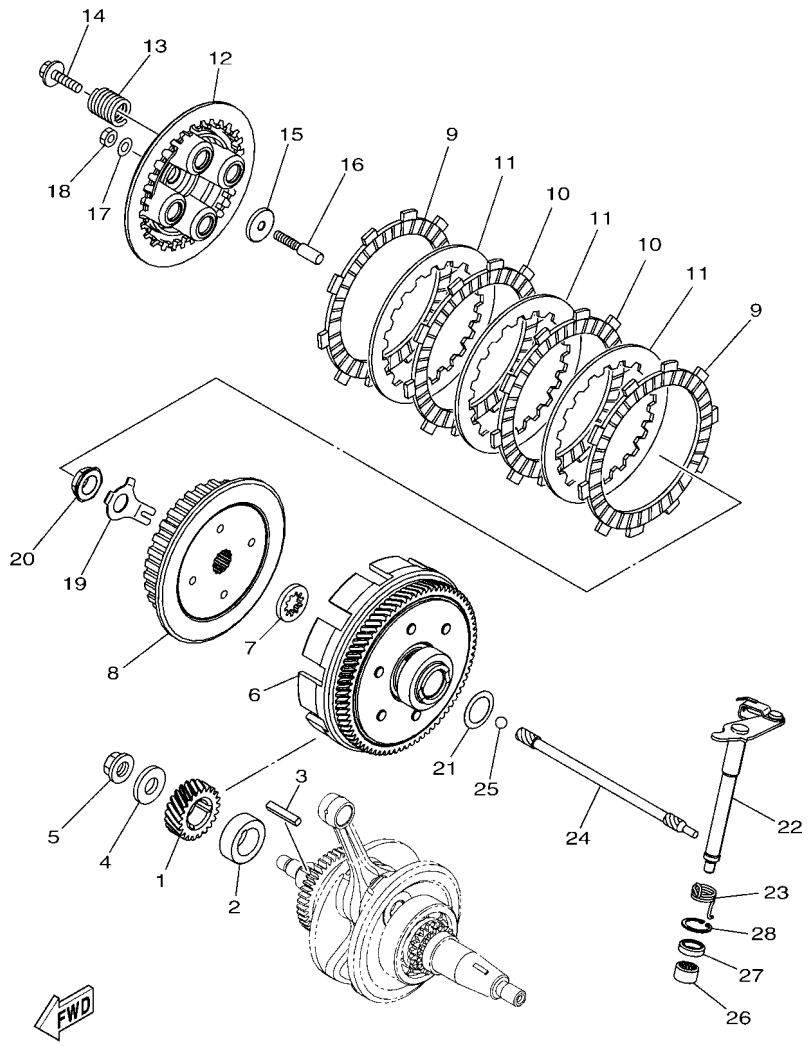

FIG. 11 EMBRAGUE CLUTCH

REF. Nº	CODIGO Nº PART NO.	DESCRIPCION DESCRIPTION	BGB1					OBSERVACIONES REMARKS
1	2GS–E6111–00	ENGRANAJE TRACC.PRIMARIA GEAR, PRIMARY DRIVE	1					
2	54B–E7258–00	COLLAR 1 COLLAR 1	1					
3	21C–E6193–00	CHAVETA DE AGUJA KEY, FEATHER	1					
4	90201–12836	ARANDELA PLANA WASHER, PLATE	1					
5	90179–12810	TUERCA NUT	1					
6	B1N–E6150–00	CAMPANA DE EMBRAGUE PRIMARY DRIVEN GEAR COMP.	1					
7	21C–E6154–00	ARANDELA, DE EMPUJE 1 PLATE, THRUST 1	1					
8	21C–E6371–00	CUBO, DE EMBRAGUE BOSS, CLUTCH	1					
9	54B–E6321–00	PLACA DE FRICCION PLATE, FRICTION	2					
10	21C–E6331–00	DISCO, DE FRICCION 2 PLATE, FRICTION 2	2					
11	21C–E6324–00	PLACA DE EMBRAGUE PLATE, CLUTCH 1	3					
12	54B–E6351–00	PLATO DE PRESION PLATE, PRESSURE 1	1					
13	21C–E6333–00	RESORTE DE EMBRAGUE 1 SPRING, CLUTCH 1	4					
14	21C–E6337–00	TORNILLO DE RESORTE SCREW, SPRING	4					
15	21C–E6358–00	PLACA DE EMPUJE PLATE, PUSH	1					
16	21C–E6356–01	VARILLA DE EMPUJE 1 ROD, PUSH 1	1					
17	54B–E6144–00	ARANDELA WASHER	1					
18	3C1–E6344–00	TUERCA DE AJUSTE NUT, ADJUSTING	1					
19	21C–E6135–10	ARANDELA DE CIERRE WASHER, LOCK	1					
20	90179–14001	TUERCA NUT	1					
21	90208–20003	ARANDELA DE RESORTE CONICO WASHER, CONICAL SPRING	1					
22	21C–E6380–02	LEVA DE EMPUJE COMPLETA PUSH LEVER ASSY	1					
23	1PM–E6345–00	RESORTE DE RETORNO SPRING, RETURN	1					
24	54B–E6357–00	VARILLA DE EMPUJE 2 ROD, PUSH 2	1					
25	93505–16844	BOLA BALL	1					
26	93315–112Y9	COJINETE DE RODILLOS BEARING	1					
27	93102–12877	SELLO ACEITE OIL SEAL	1					

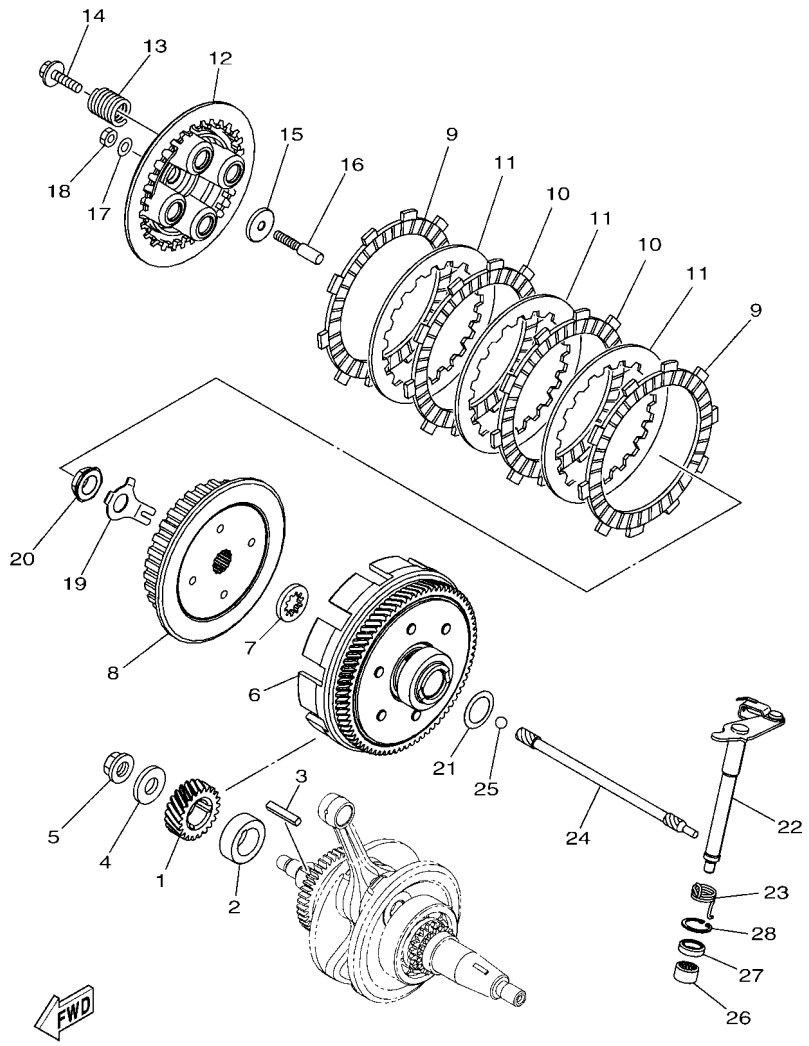

FIG. 11 EMBRAGUE — CLUTCH

REF. Nº	CODIGO Nº PART NO.	DESCRIPCION DESCRIPTION	BGB1					OBSERVACIONES REMARKS
28	99009–20500	PRESILLA REDONDA CIRCLIP	1					

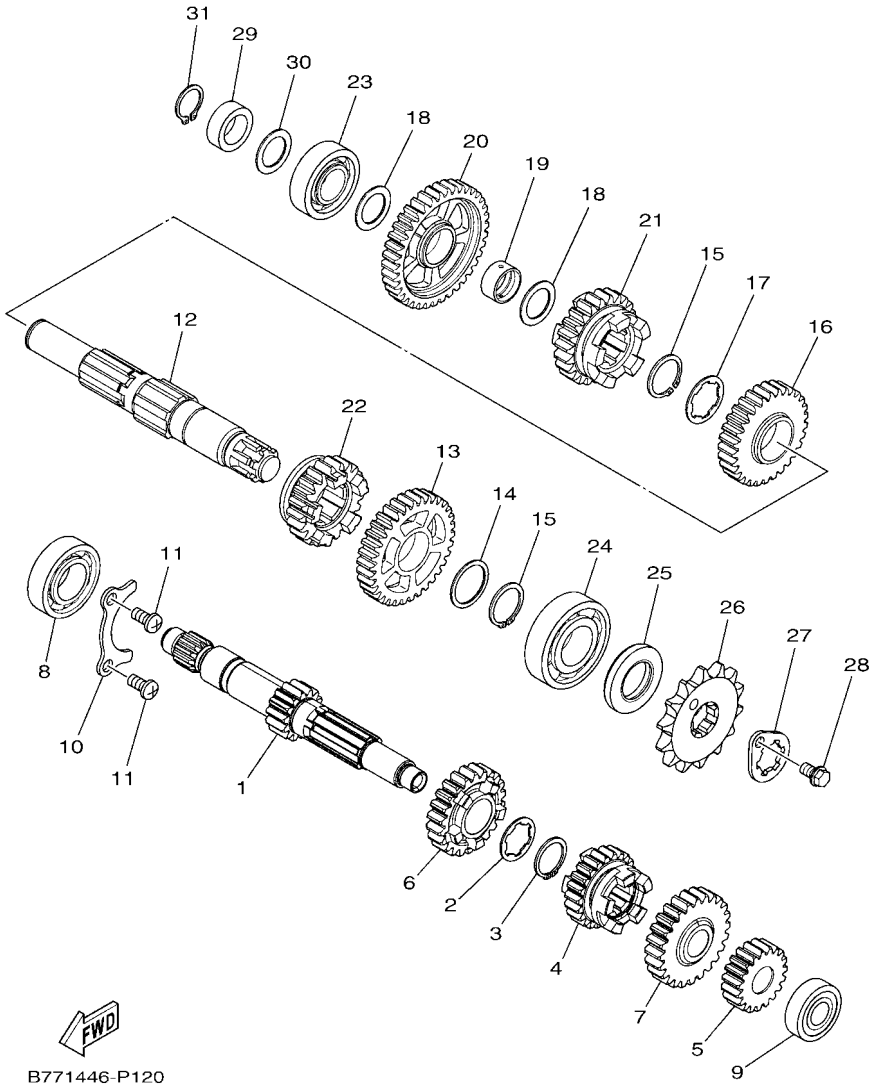

FIG. 12 TRANSMISION — TRANSMISSION

REF. Nº	CODIGO Nº PART NO.	DESCRIPCION DESCRIPTION	BGB1					OBSERVACIONES REMARKS
1	B1N–E7411–00	EJE PRIMARIO (14T) AXLE, MAIN (14T)	1					
2	90209–17285	ARANDELA DE SEPARACION WASHER	1					
3	93410–20809	SEGURO CIRCLIP	1					
4	B1N–E7131–00	ENGRANAJE PINON DE 3RA (22T) GEAR, 3RD PINION (22T)	1					
5	B1N–E7121–00	ENGRANAJE PINON DE 2DA (19T) GEAR, 2ND PINION (19T)	1					
6	B1N–E7141–00	ENGRANAJE PINON DE 4TA (22T) GEAR, 4TH PINION (22T)	1					
7	B1N–E7151–00	ENGRANAJE PINON DE 5TA (24T) GEAR, 5TH PINION (24T)	1					
8	93306–054YE	COJINETE BEARING	1					UR UR
	93306–054Y6	COJINETE BEARING	1					UR UR
9	93306–201Y4	COJINETE BEARING	1					
10	21C–E7471–00	PLACA, DE CUBIERTA PLATE, COVER	1					
11	98502–06012	TORNILLO SCREW, PAN HEAD	2					
12	B1N–E7402–10	EJE DE TRACCION COMPLETO DRIVE AXLE ASSY	1					
13	B1N–E7221–00	ENGRANAJE RUEDA DE 2DA (34T) GEAR, 2ND WHEEL (34T)	1					
14	90201–22793	ARANDELA PLANA WASHER, PLATE	1					
15	93410–22039	SEGURO CIRCLIP	2					
16	B1N–E7231–00	ENGRANAJE RUEDA DE 3RA (29T) GEAR, 3RD WHEEL (29T)	1					
17	90209–18208	ARANDELA DE SEPARACION WASHER	1					
18	90201–178D3	ARANDELA PLANA WASHER, PLATE	2					
19	21C–E7258–00	COLLAR 1 COLLAR 1	1					
20	B1N–E7211–00	ENGRANAJE RUEDA DE 1 RA (38T) GEAR, 1ST WHEEL (38T)	1					
21	B1N–E7241–00	ENGRANAJE DE RUEDA 4TA (23T) GEAR, 4TH WHEEL (23T)	1					
22	B1N–E7251–00	ENGRANAJE RUEDA DE 5TA (21T) GEAR, 5TH WHEEL (21T)	1					
23	93306–203XR	COJINETE BEARING	1					
24	93306–272X4	COJINETE BEARING	1					UR UR
	93306–272X1	COJINETE BEARING	1					UR UR
25	93102–22818	SELLO ACEITE OIL SEAL	1					

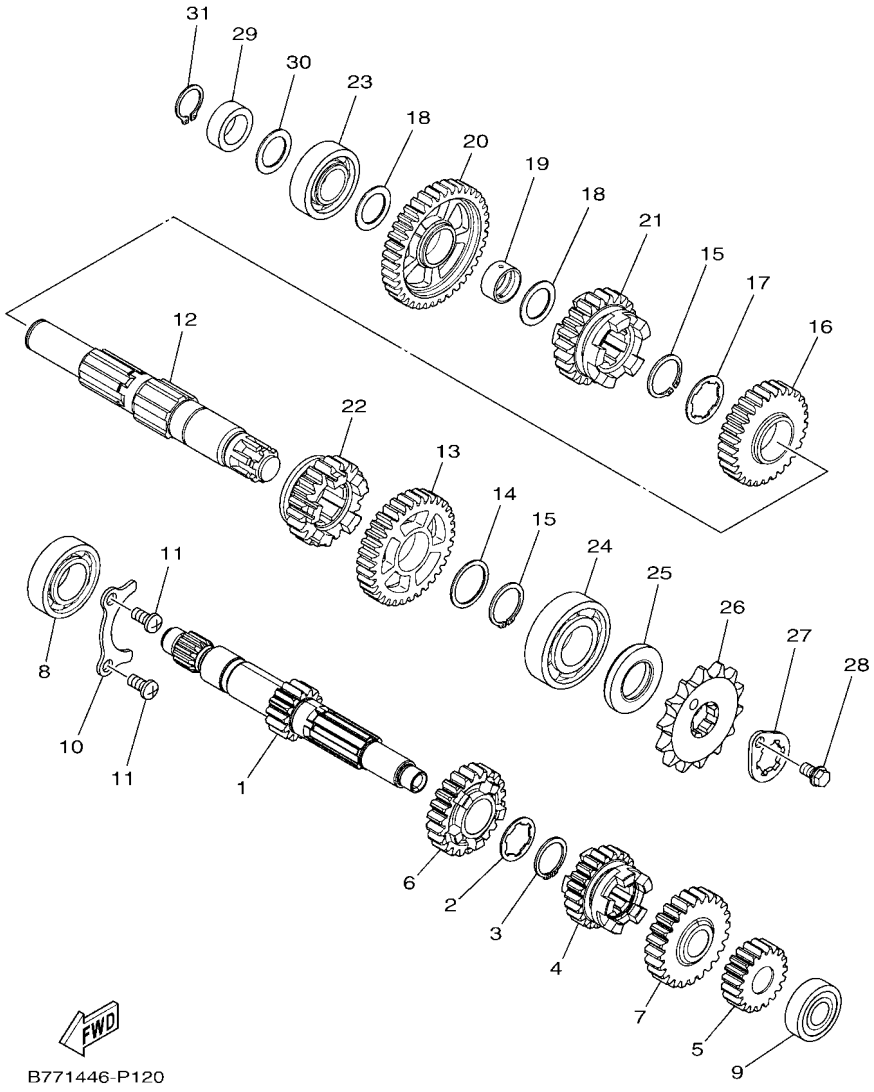

FIG. 12 TRANSMISION — TRANSMISSION

REF. Nº	CODIGO Nº PART NO.	DESCRIPCION DESCRIPTION	BGB1					OBSERVACIONES REMARKS
26	93822–14800	CORONA (14T) SPROCKET, DRIVE (14T)	1					
27	4LS–E7456–00	SOPORTE DE CORONA HOLDER, SPROCKET	1					
28	95022–06010	PERNO, DE BRIDA BOLT, FLANGE	1					
29	21C–E5666–00	SEPARADOR SPACER	1					
30	90201–178D3	ARANDELA PLANA WASHER, PLATE	1					
31	99009–17400	PRESILLA REDONDA CIRCLIP	1					

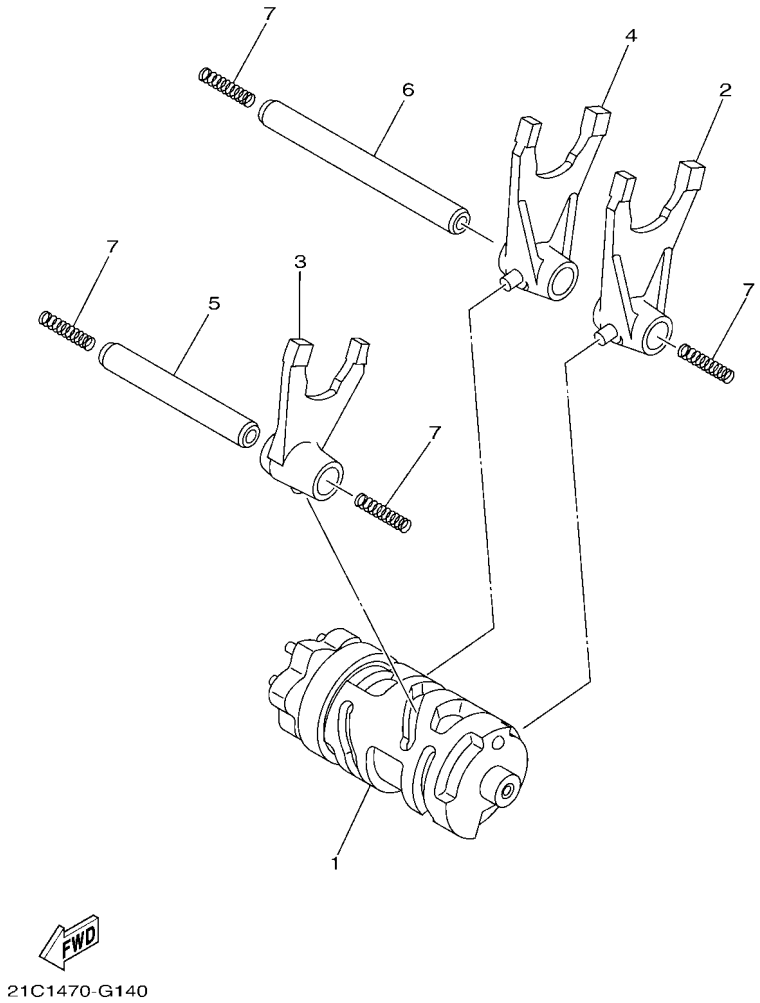

FIG. 13 LEVA DE CAMBIO & HORQUILLA — SHIFT CAM & FORK

REF. Nº	CODIGO Nº PART NO.	DESCRIPCION DESCRIPTION	BGB1					OBSERVACIONES REMARKS
1	2GS–E8540–10	LEVA DEL CAMBIO COMPLETA SHIFT CAM ASSY	1					
2	21C–E8511–00	HORQUILLA DEL CAMBIO 1 FORK, SHIFT 1	1					
3	21C–E8512–00	HORQUILLA DEL CAMBIO 2 FORK, SHIFT 2	1					
4	21C–E8513–00	HORQUILLA DEL CAMBIO 3 FORK, SHIFT 3	1					
5	21C–E8531–00	BARRA GUIA HORQ. CAMBIO 1 BAR, SHIFT FORK GUIDE 1	1					
6	21C–E8535–00	BARRA GUIA HORQ .CAMBIO 2 BAR, SHIFT FORK GUIDE 2	1					
7	90501–06800	RESORTE DE COMPRESION SPRING, COMPRESSION	4					

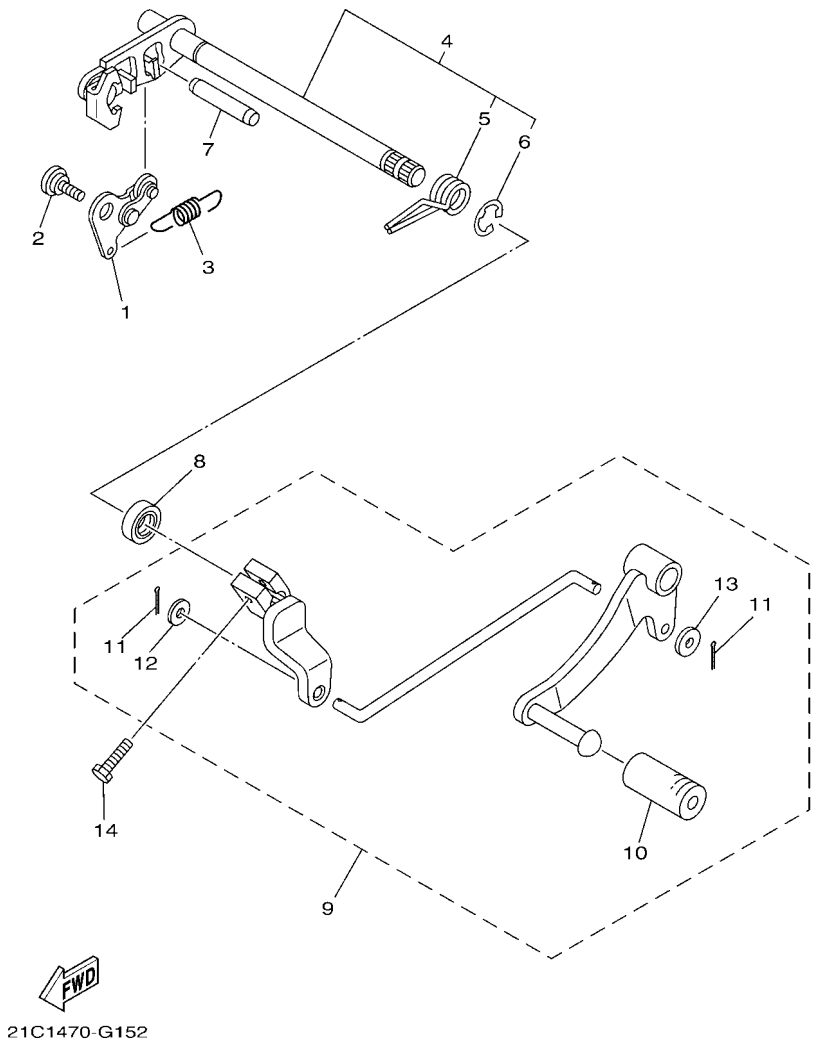

FIG. 14 EJE DE CAMBIO & PEDAL — SHIFT SHAFT

REF. Nº	CODIGO Nº PART NO.	DESCRIPCION DESCRIPTION	BGB1					OBSERVACIONES REMARKS
1	21C–E8140–00	PALANCA DE TOPE COMPLETA STOPPER LEVER ASSY	1					
2	90109–06259	PERNO BOLT	1					
3	21C–E8337–00	RESORTE SPRING	1					
4	21C–E8101–01	EJE SELECTOR COMPLETO SHIFT SHAFT ASSY	1					
5	90508–32805	.RESORTE DE TORSION .SPRING, TORSION	1					
6	99001–10600	.PRESILLA REDONDA .CIRCLIP	1					
7	93608–43238	PASADOR DE CLAVIJA PIN, DOWEL	1					
8	93102–12875	SELLO ACEITE OIL SEAL	1					
9	2GS–E8110–10	PEDAL DE CAMBIO COMPLETO SHIFT PEDAL ASSY	1					
10	20P–E8113–00	.FUNDA DEL PEDAL DEL CAMBIO .COVER, SHIFT PEDAL	1					
11	90252–18800	.PASADOR DE CHAVETA .PIN, COTTER	2					
12	92902–06200	.ARANDELA .WASHER	1					
13	90201–06871	.ARANDELA PLANA .WASHER, PLATE	1					
14	97012–06020	PERNO BOLT	1					

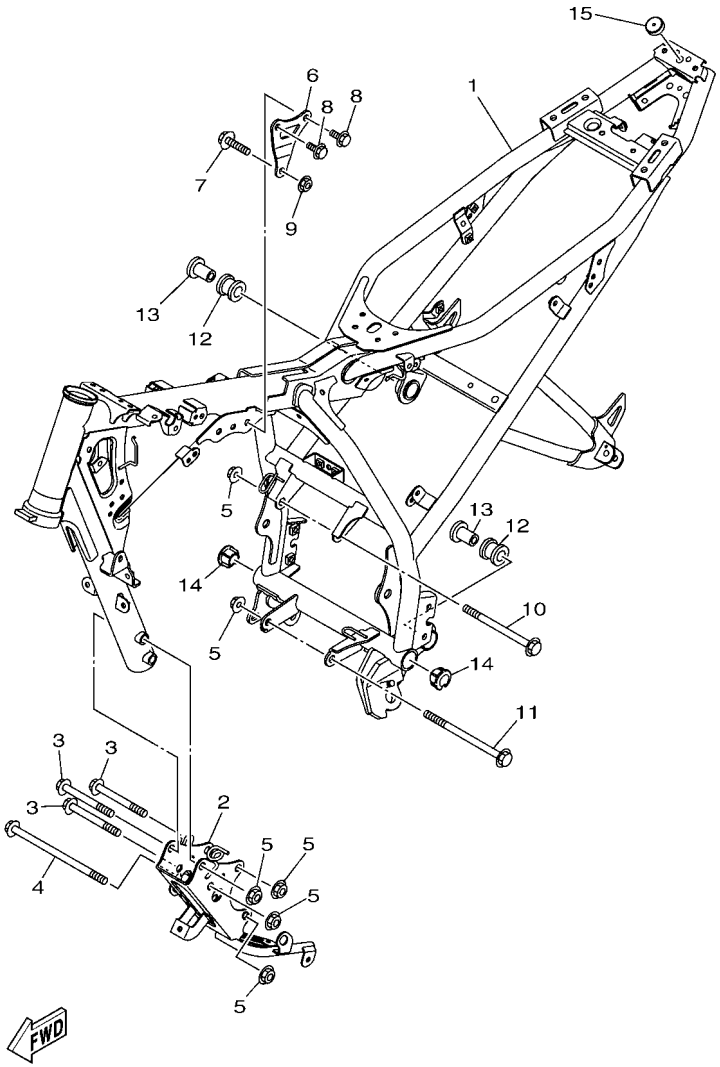

B9P1470-V150

FIG. 15 CUADRO — FRAME

REF. Nº	CODIGO Nº PART NO.	DESCRIPCION DESCRIPTION	BGB1					OBSERVACIONES REMARKS
1	B4G–F1110–00	ARMAZON COMPLETO FRAME COMP.	1					
2	B9P–F1316–00	SOPORTE DE MOTOR 2 STAY, ENGINE 2	1					
3	95812–10080	TORNILLO DE REBORDE BOLT, FLANGE	3					
4	90105–10861	TORNILLO BOLT, FLANGE	1					
5	90179–10819	TUERCA NUT	6					
6	2GS–F1317–00	SOPORTE DE MOTOR 3 STAY, ENGINE 3	1					
7	90105–08002	TORNILLO BOLT, FLANGE	1					
8	95812–08016	TORNILLO DE REBORDE BOLT, FLANGE	2					
9	90179–08674	TUERCA NUT	1					
10	95817–10130	TORNILLO BOLT, FLANGE	1					
11	90105–10861	TORNILLO BOLT, FLANGE	1					
12	20P–E4747–00	AMORTIGUADOR DE SILENCIADOR DAMPER, MUFFLER	2					
13	90387–08822	ESPACIADOR COLLAR	2					
14	2GS–F1279–00	TAPON CIEGO PLUG, BLIND	2					
15	1PM–F4741–00	COJIN DE ASIENTO PAD, SEAT	1					

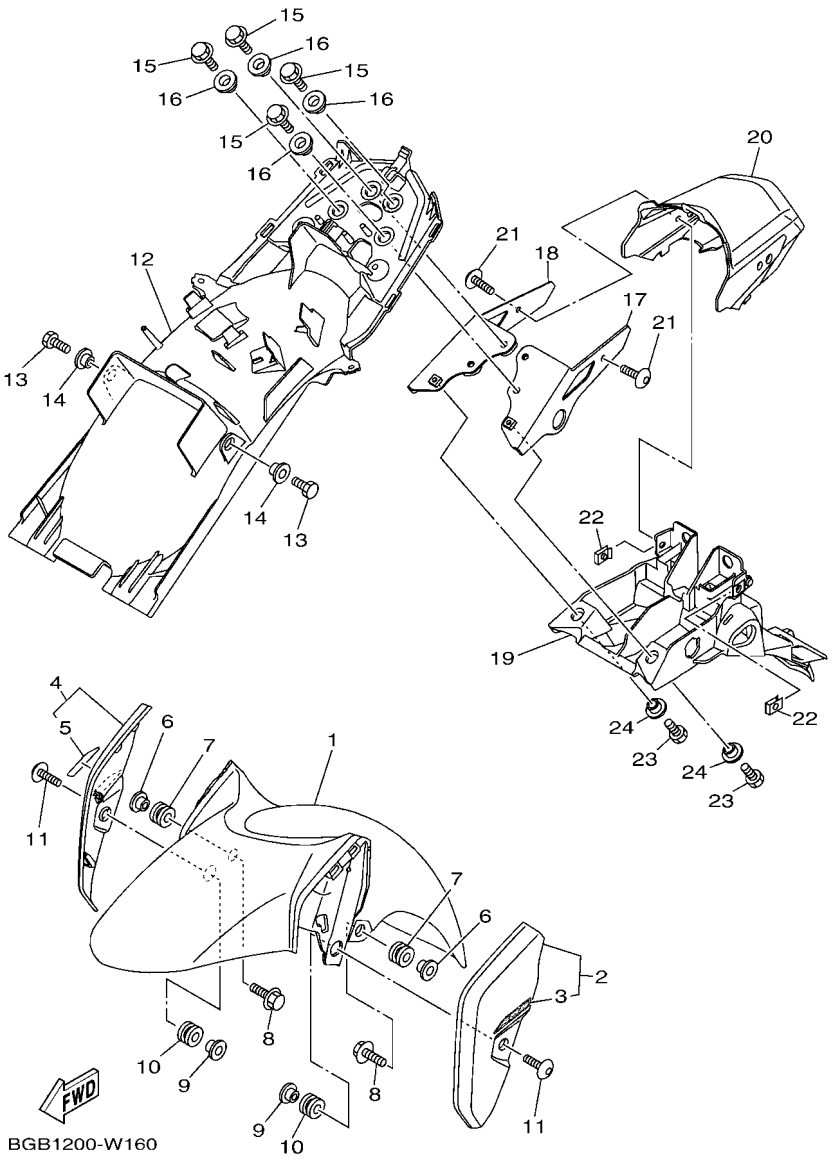

FIG. 16 GUARDABARRO FENDER

REF. Nº	CODIGO Nº PART NO.	DESCRIPCION DESCRIPTION	BGB1					OBSERVACIONES REMARKS
1	B4G–F1511–00	GUARDABARRO DELANTERO FENDER, FRONT	1					
2	B4G–XF155–00–P0	GUARDABARRO, DELANTERO 2 FENDER ,OVER 1 ASSY	1					EXCEPT PARA MNM3 EXCEPT FOR MNM3
	B4G–XF155–00–P1	GUARDABARRO, DELANTERO 2 FENDER ,OVER 1 ASSY	1					CM6 PARA MNM3 CM6 FOR MNM3
3	B9E–F843G–00	.CALCOMANIA 3 .GRAPHIC, 3	1					
4	B4G–XF15B–00–P0	GUARDABARRO, DELANTERO 1 FENDER ,OVER 2 ASSY	1					EXCEPT PARA MNN3 EXCEPT FOR MNN3
	B4G–XF15B–00–P1	GUARDABARRO, DELANTERO 1 FENDER ,OVER 2 ASSY	1					CM6 PARA MNM3 CM6 FOR MNM3
5	B9E–F843G–00	.CALCOMANIA 3 .GRAPHIC, 3	1					
6	90387–068C5	ESPACIADOR COLLAR	2					
7	90480–08801	TAPON GROMMET	2					
8	95822–06020	TORNILLO DE REBORDE BOLT, FLANGE	2					
9	90387–068S5	ESPACIADOR COLLAR	2					
10	90480–12824	TAPON GROMMET	2					
11	90111–06868	TORNILLO BOLT,HEX. SOCKET BUTTON	2					
12	B9P–F1611–00	GUARDABARRO TRASERO FENDER, REAR	1					
13	97012–06014	PERNO BOLT	2					
14	90387–06048	ESPACIADOR COLLAR	2					
15	90105–068C6	TORNILLO BOLT, FLANGE	4					
16	90387–08079	ESPACIADOR COLLAR	4					
17	B4G–F1613–00	SOPORTE DE GUARDABARRO STAY, FENDER 1	1					
18	B4G–F1614–00	SOPORTE DE GUARDABARRO 2 STAY, FENDER 2	1					
19	B4G–F1651–00	TAPA DE GUARDABARRO TRAS. COVER, REAR FENDER	1					
20	B4G–F163A–00	CUBIERTA TRAS GUARDABARRO 1 COVER, REAR FENDER 1	1					
21	90149–06829	TORNILLO DE REGLAJE SCREW	2					
22	90183–06800	TUERCA DE RESORTE NUT, SPRING	2					
23	97012–06014	PERNO BOLT	2					
24	90387–06048	ESPACIADOR COLLAR	2					

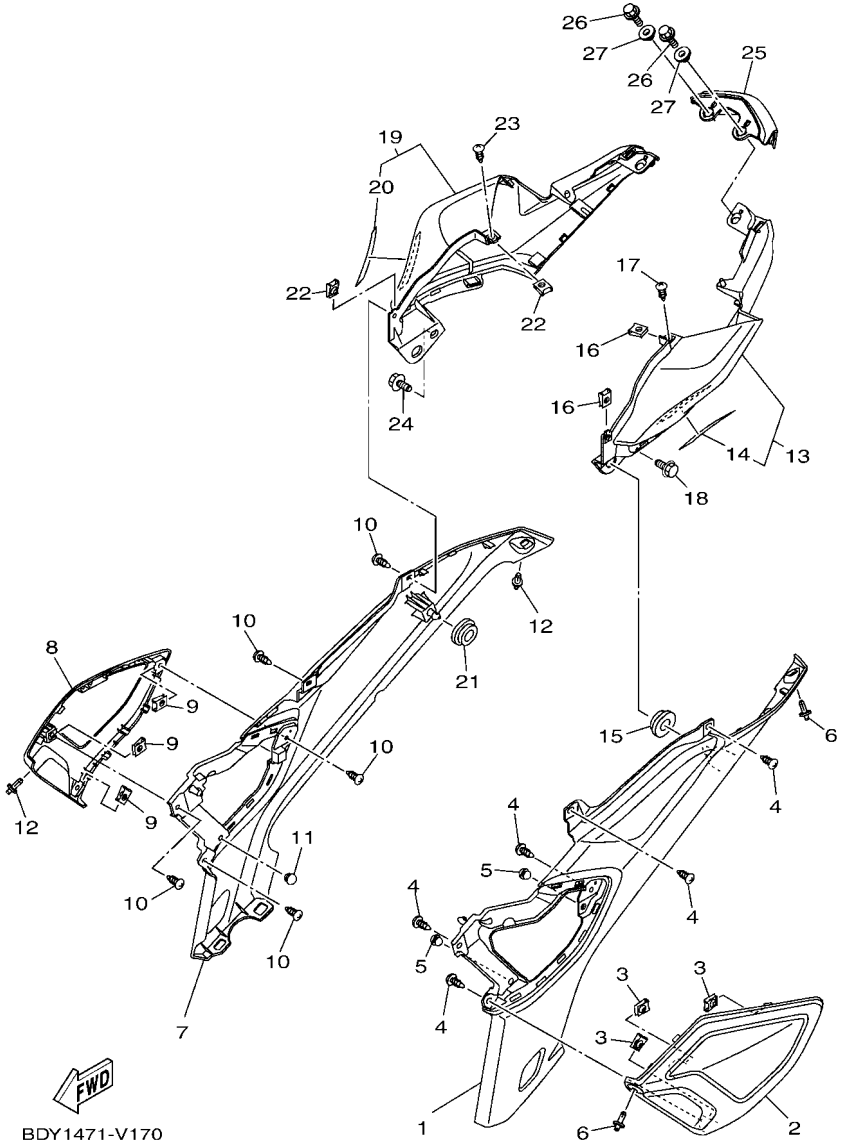

FIG. 17 CUBIERTA LATERAL — SIDE COVER

REF. Nº	CODIGO Nº PART NO.	DESCRIPCION DESCRIPTION	BGB1					OBSERVACIONES REMARKS
1	B4G–F1711–00	CUBIERTA LATERAL 1 COVER, SIDE 1	1					
2	B4G–F172A–00–P0	PANEL 1 PANEL 1	1					UR SMX PARA MBL2 UR SMX FOR MBL2
	B4G–F172A–00–P3	PANEL 1 PANEL 1	1					UR CM6 PARA MNM3 UR CM6 FOR MNM3
	B4G–F172A–00–P4	PANEL 1 PANEL 1	1					UR MNM3 PARA MDPBM1 UR MNM3 FOR MDPBM1
	B4G–F172A–00–P5	PANEL 1 PANEL 1	1					UR PARA VRC1 UR FOR VRC1
3	90183–05807	TUERCA DE RESORTE NUT, SPRING	3					
4	97702–50012	TORNILLO ROSCA HEMBRA SCREW, TAPPING	5					
5	21C–F1717–00	AMORTIGUADOR DAMPER	2					
6	90269–06816	REMACHE RIVET	2					
7	B4G–F1721–00	CUBIERTA LATERAL 2 COVER, SIDE 2	1					
8	B4G–F172F–00–P0	PANEL 2 PANEL 2	1					UR SMX PARA MBL2 UR SMX FOR MBL2
	B4G–F172F–00–P3	PANEL 2 PANEL 2	1					UR CM6 PARA MNM3 UR CM6 FOR MNM3
	B4G–F172F–00–P4	PANEL 2 PANEL 2	1					UR MNM3 PARA MDPBM1 UR MNM3 FOR MDPBM1
	B4G–F172F–00–P5	PANEL 2 PANEL 2	1					UR PARA VRC1 UR FOR VRC1
9	90183–05807	TUERCA DE RESORTE NUT, SPRING	3					
10	97702–50012	TORNILLO ROSCA HEMBRA SCREW, TAPPING	5					
11	21C–F1717–00	AMORTIGUADOR DAMPER	1					
12	90269–06816	REMACHE RIVET	2					
13	B4G–XF173–00–P2	TAPA LATERAL 3 COVER, SIDE 3	1					UR PARA MBL2 UR FOR MBL2
	B4G–XF173–10–P3	TAPA LATERAL 3 COVER, SIDE 3	1					UR PARA MNM3 UR FOR MNM3
	B4G–XF173–20–P4	TAPA LATERAL 3 COVER, SIDE 3	1					UR PARA MDPBM1 UR FOR MDPBM1
	B4G–XF173–00–P5	TAPA LATERAL 3 COVER, SIDE 3	1					UR PARA VRC1 UR FOR VRC1
14	B4G–F173E–00	.GRAFICO, 1 .GRAPHIC 1	1					UR PARA MBL2 UR FOR MBL2
	B4G–F173E–10	.GRAFICO, 1 .GRAPHIC 1	1					UR PARA MNM3 UR FOR MNM3
	B4G–F173E–20	.GRAFICO, 1 .GRAPHIC 1	1					UR PARA MDPBM1 UR FOR MDPBM1
	B4G–F173E–30	.GRAFICO, 1 .GRAPHIC 1	1					UR PARA VRC1 UR FOR VRC1
15	90480–01559	TAPON GROMMET	1					

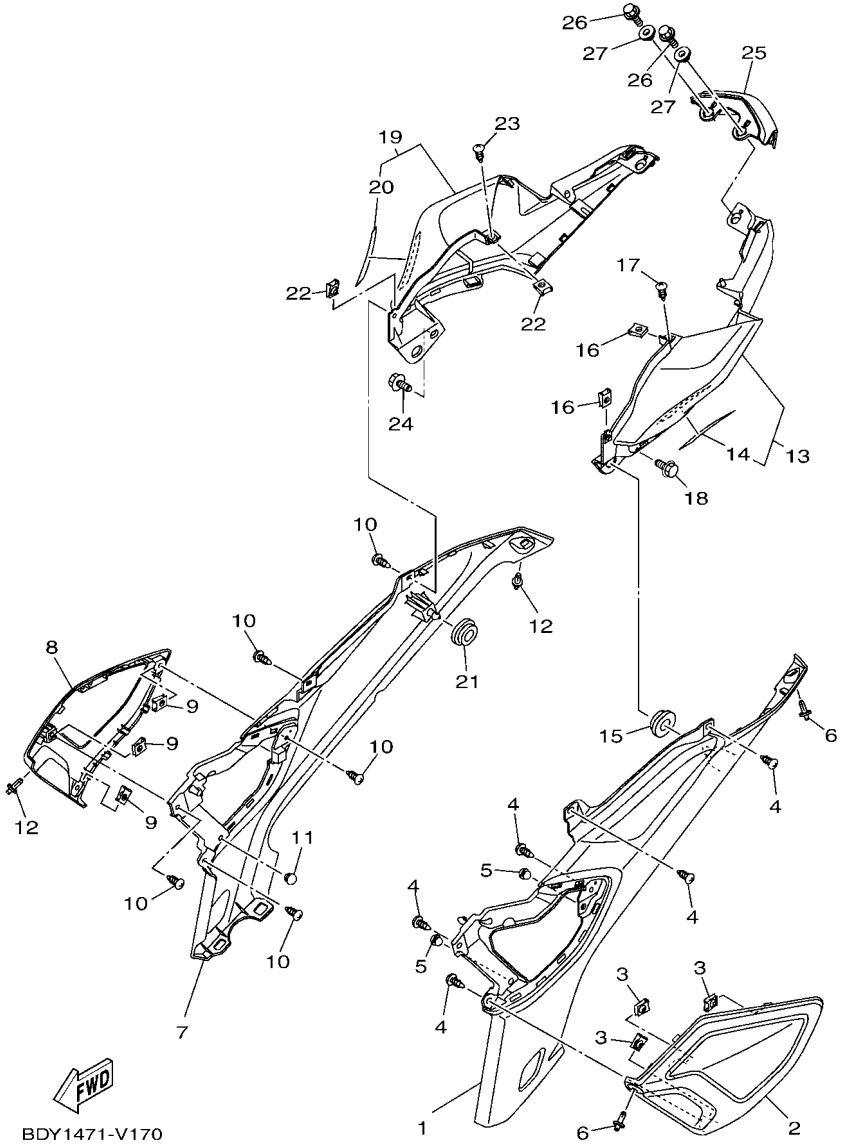

FIG. 17 CUBIERTA LATERAL — SIDE COVER

REF. Nº	CODIGO Nº PART NO.	DESCRIPCION DESCRIPTION	BGB1					OBSERVACIONES REMARKS
16	90183–05807	TUERCA DE RESORTE NUT, SPRING	2					
17	97702–50012	TORNILLO ROSCA HEMBRA SCREW, TAPPING	1					
18	90119–06137	TORNILLO CON ARANDELA BOLT, WITH WASHER	1					
19	B4G–XF174–00–P2	CUBIERTA LATERAL 4 COVER, SIDE 4	1					UR PARA MBL2 UR FOR MBL2
	B4G–XF174–10–P3	CUBIERTA LATERAL 4 COVER, SIDE 4	1					UR PARA MNM3 UR FOR MNM3
	B4G–XF174–20–P4	CUBIERTA LATERAL 4 COVER, SIDE 4	1					UR PARA MDPBM1 UR FOR MDPBM1
	B4G–XF174–00–P5	CUBIERTA LATERAL 4 COVER, SIDE 4	1					UR PARA VRC1 UR FOR VRC1
20	B4G–F173F–00	.GRAFICO 2 .GRAPHIC 2	1					UR PARA MBL2 UR FOR MBL2
	B4G–F173F–10	.GRAFICO 2 .GRAPHIC 2	1					UR PARA MNM3 UR FOR MNM3
	B4G–F173F–20	.GRAFICO 2 .GRAPHIC 2	1					UR PARA MDPBM1 UR FOR MDPBM1
	B4G–F173F–30	.GRAFICO 2 .GRAPHIC 2	1					UR PARA VRC1 UR FOR VRC1
21	90480–01559	TAPON GROMMET	1					
22	90183–05807	TUERCA DE RESORTE NUT, SPRING	2					
23	97702–50012	TORNILLO ROSCA HEMBRA SCREW, TAPPING	1					
24	90119–06137	TORNILLO CON ARANDELA BOLT, WITH WASHER	1					
25	B4G–F171E–00	CUBIERTA LATERAL 5 COVER, SIDE 5	1					
26	95022–06016	PERNO, DE BRIDA BOLT, FLANGE	2					
27	90387–068N2	ESPACIADOR COLLAR	2					

FIG. 18 BRAZO TRASERO & SUSPENSION — REAR ARM & SUSPENSION

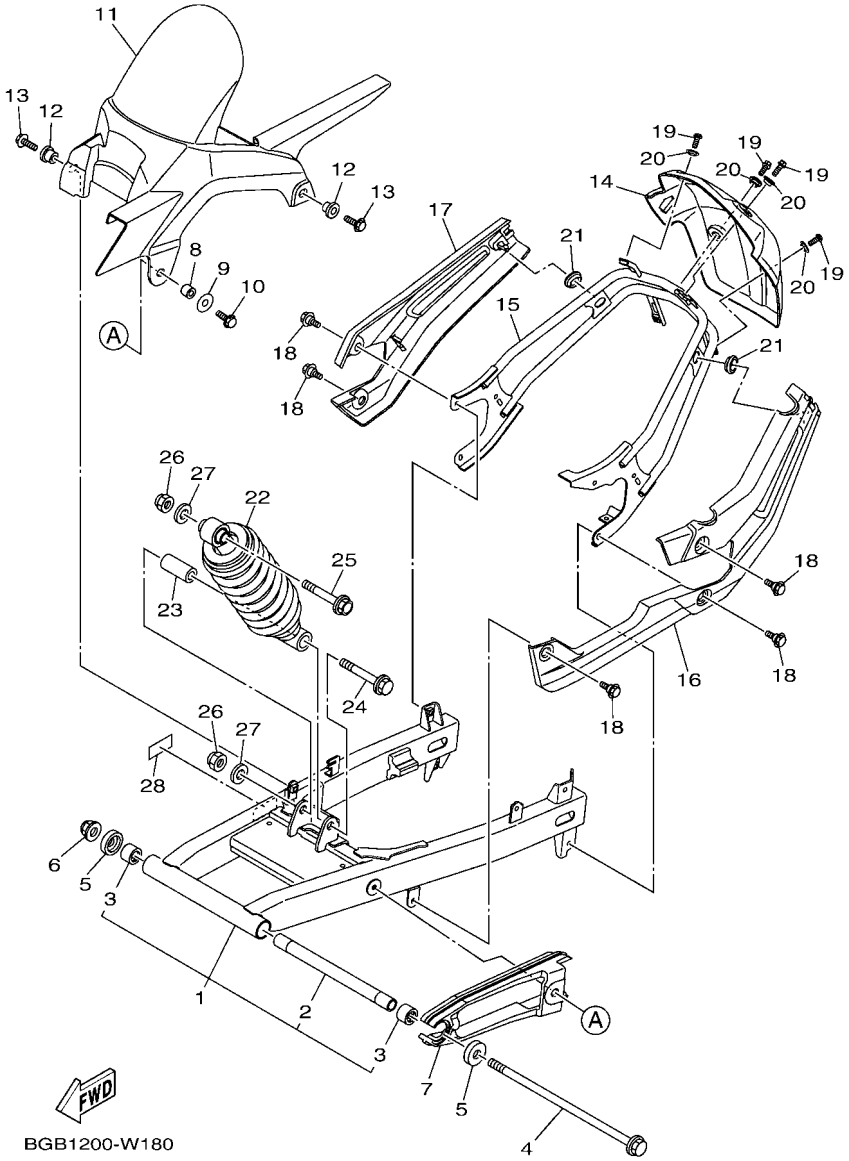

REF. Nº	CODIGO Nº PART NO.	DESCRIPCION DESCRIPTION	BGB1					OBSERVACIONES REMARKS
1	B4G–WF211–10	BRAZO TRASERO COMPLETO REAR ARM COMP.	1					
2	90387–12863	.ESPACIADOR .COLLAR	1					
3	93317–318Y5	.COJINETE .BEARING	2					
4	2GS–F2141–00	EJE DEL BARCULANTE SHAFT, PIVOT	1					
5	20P–F2129–00	TAPA DE EMPUJE 2 COVER, THRUST 2	2					
6	90185–12805	TUERCA AUTOBLOCANTE NUT, SELF-LOCKING	1					
7	2GS–F2151–00	SELLO DE GUARDA SEAL, GUARD	1					
8	90387–066J9	ESPACIADOR COLLAR	1					
9	90201–06086	ARANDELA PLANA WASHER, PLATE	1					
10	95022–06016	PERNO, DE BRIDA BOLT, FLANGE	1					
11	2GS–F1650–10	GUARDABARRO TRANSERO COMP. REAR FENDER COMP.	1					
12	90387–068S1	ESPACIADOR COLLAR	2					
13	95022–06016	PERNO, DE BRIDA BOLT, FLANGE	2					
14	B4G–F2327–00	GUARDAFANGO 1 MUD GUARD 1	1					
15	BGB–F1643–00	APOYO TRASERO STAY, FENDER 3	1					
16	B4G–F1644–00	APOYO TRASERO STAY, FENDER 4	1					
17	B4G–F1645–00	ASIDERO SILLIN STAY, FENDER 5	1					
18	90109–068C2	PERNO BOLT	5					
19	95027–06012	PERNO, DE BRIDA BOLT, FLANGE	4					
20	90560–08251	SEPARADOR SPACER	4					
21	90480–01558	TAPON GROMMET	2					
22	2GS–F2210–11	AMORTIGUADOR TRASERO COMPLETO SHOCK ABSORBER ASSY, REAR	1					
23	90387–12845	ESPACIADOR COLLAR	1					
24	90105–12057	TORNILLO BOLT, FLANGE	1					
25	90105–12804	TORNILLO BOLT, FLANGE	1					
26	95612–12100	TUERCA U NUT, U	2					
27	90201–122H1	ARANDELA PLANA WASHER, PLATE	2					

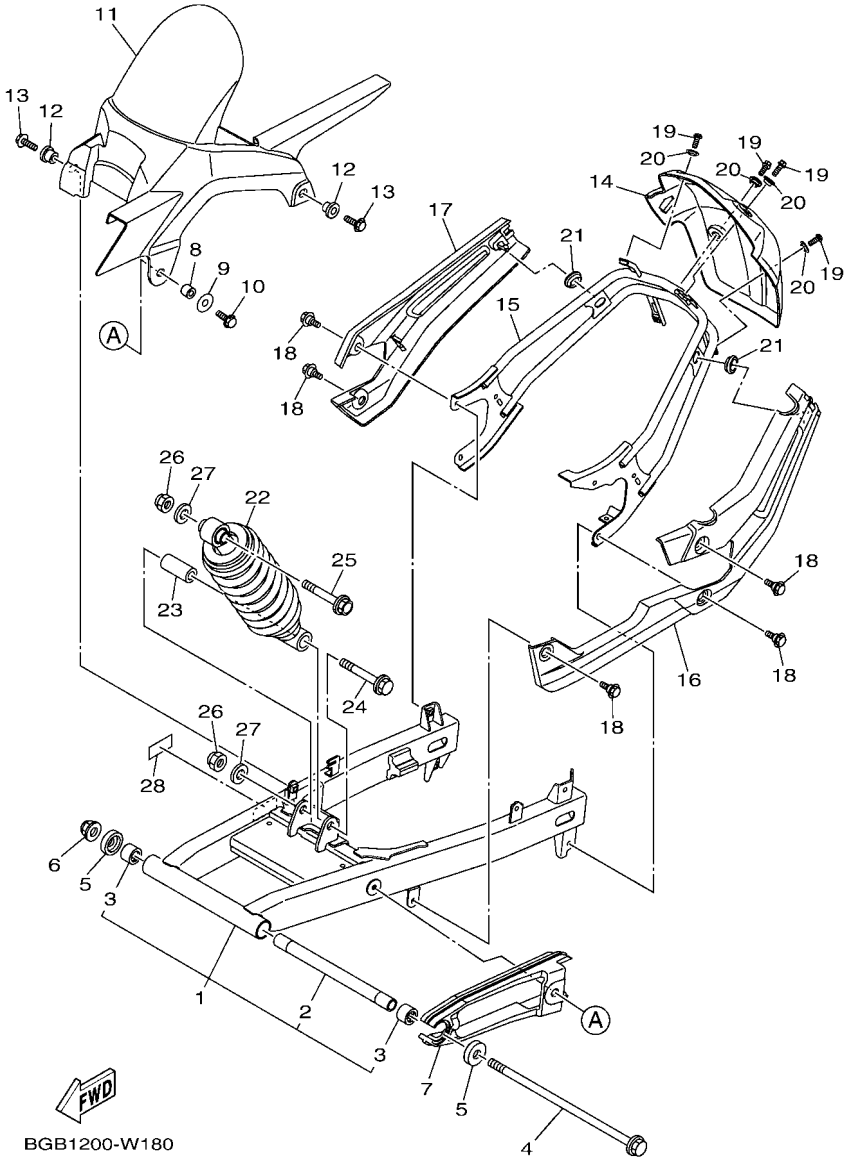

FIG. 18 BRAZO TRASERO & SUSPENSION — REAR ARM & SUSPENSION

REF. Nº	CODIGO Nº PART NO.	DESCRIPCION DESCRIPTION	BGB1					OBSERVACIONES REMARKS
28	BK7–F1668–00	ETIQUETA DE FRANJA LABEL, TIRE	1					

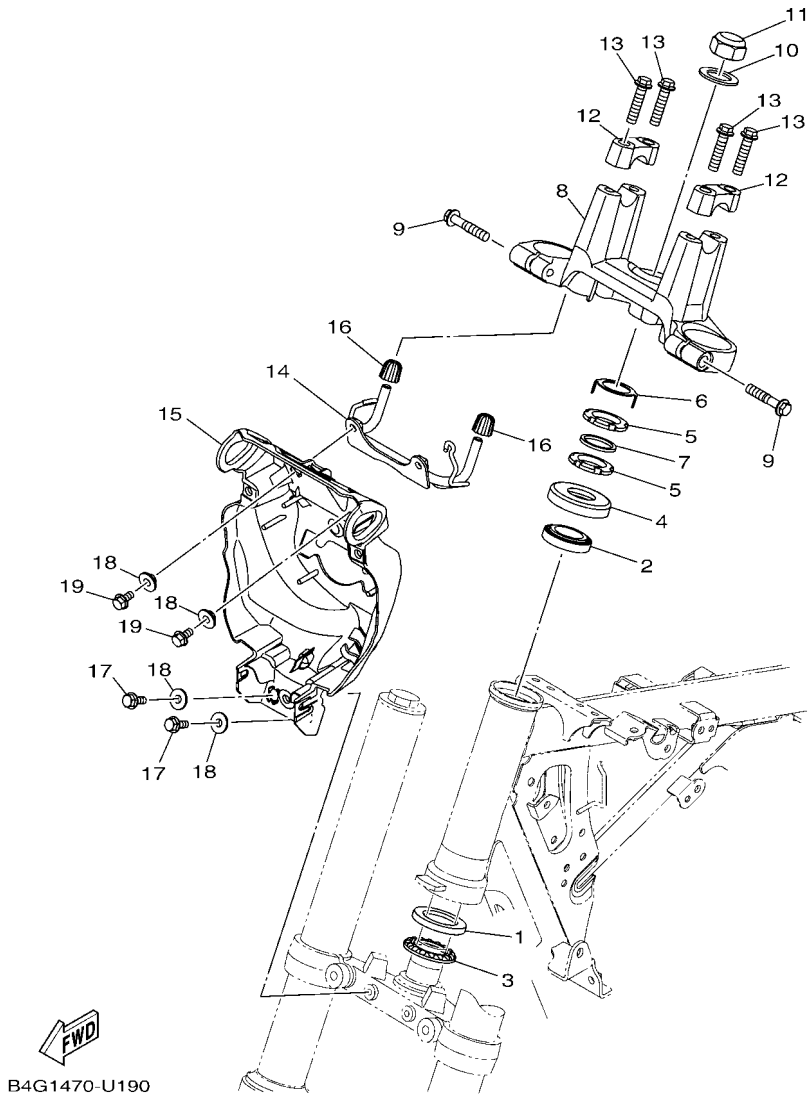

FIG. 19 DIRECCION — STEERING

REF. Nº	CODIGO Nº PART NO.	DESCRIPCION DESCRIPTION	BGB1					OBSERVACIONES REMARKS
1	21C–F3412–00	PISTA DE BOLAS 2 RACE, BALL 2	1					
2	93399–99949	COJINETE BEARING	1					
3	4LS–F341E–10	RETEN DE COJINETE RETAINER, BALL BEARING	1					
4	5YY–F3416–00	CUBIERTA DE BASE DE BOLA 2 COVER, BALL RACE 2	1					
5	90179–25615	TUERCA NUT	2					
6	20P–F3418–00	ARANDELA ESPECIAL WASHER, SPECIAL	1					
7	90202–26142	ARANDELA DE PLANA WASHER, PLATE	1					
8	B4G–F3435–00	PLATINA SUPERIOR CROWN, HANDLE	1					
9	95022–08040	PERNO, DE BRIDA BOLT, FLANGE	2					
10	90201–22018	ARANDELA PLANA WASHER, PLATE	1					
11	90176–22081	TUERCA CORONA NUT, CAP	1					
12	B97–F3441–00	SOPORTE DE MANUBRIO HOLDER, HANDLE UPPER	2					UR UR
	B97–F3441–10	SOPORTE DE MANUBRIO HOLDER, HANDLE UPPER	2					UR UR
13	95022–08035	PERNO, DE BRIDA BOLT, FLANGE	4					
14	B4G–F317E–00	SOPORTE 1 STAY 1	1					
15	B4G–F317F–00	SOPORTE 2 STAY 2	1					
16	21C–F317J–00	AMORTIGUADOR 1 DAMPER 1	2					
17	95822–06016	TORNILLO DE REBORDE BOLT, FLANGE	2					
18	90387–07819	ESPACIADOR COLLAR	4					
19	95812–06012	TORNILLO DE REBORDE BOLT, FLANGE	2					

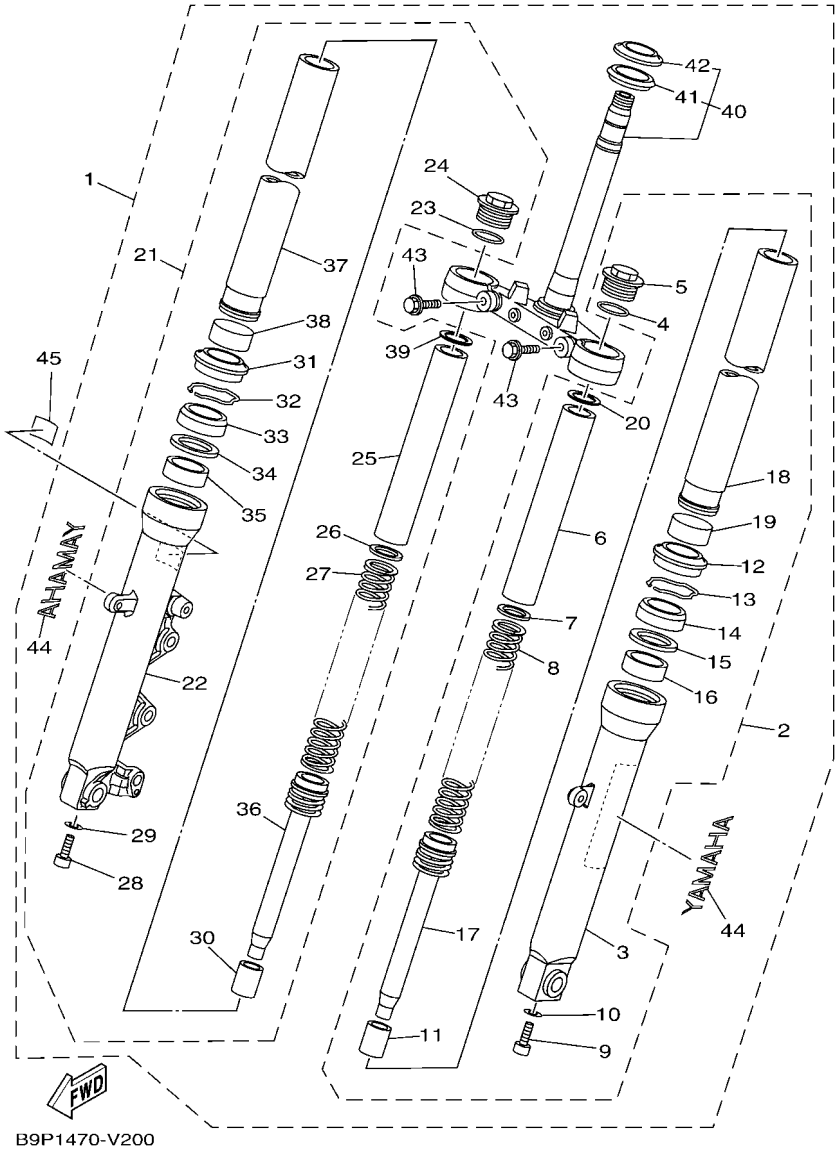

FIG. 20 HORQUILLA DELANTERA — FRONT FORK

REF. Nº	CODIGO Nº PART NO.	DESCRIPCION DESCRIPTION	BGB1					OBSERVACIONES REMARKS
1	B4G–F3100–00	HORQUILLA DELANTERA COMPLETA FRONT FORK ASSY	1					
2	2GS–F3102–00	.HORQUILLA DELANTERA COMPL.(MI) .FRONT FORK ASSY (L.H)	1					
3	21C–F3126–11	..TUBO EXTERIOR (IZQUIERDO) ..TUBE, OUTER (L.H)	1					
4	21C–F3114–00	..EMPAQUE ..GASKET	1					
5	21C–F3111–00	..PERNO DE TAPA ..BOLT, CAP	1					
6	21C–F3118–00	..SEPARADOR ..SPACER	1					
7	21C–F3149–00	..ARANDELA DE RESORTE SUPERIOR ..WASHER, SPRING UPPER	1					
8	21C–F3141–00	..RESORTE HORQUILLA DELANT. ..SPRING, FRONT FORK	1					
9	21C–F3181–00	..TORNILLO CABEZAHEXAGONAL ..BOLT, HEXAGON SOCKET HEAD	1					
10	21C–F3158–00	..EMPAQUE ..GASKET	1					
11	21C–F3173–00	..VASTAGO AHUSADO ..SPINDLE, TAPER	1					
12	2GS–F3144–00	..GUARDAPOLVO ..SEAL, DUST	1					
13	21C–F3156–00	..ANILLO DE ENGANCHE ..RING, SNAP	1					
14	2GS–F3145–00	..RETEN DE ACEITE ..OIL SEAL	1					
15	21C–F3146–00	..ARANDELA DE SELLO DE ACEITE ..WASHER, OIL SEAL	1					
16	4FM–23125–40	..METAL CORREDIZO 1 ..METAL, SLIDE 1	1					
17	2GS–F3170–00	..CILINDRO COMPL DE HORQ DELANT ..CYLINDER COMP., FRONT FORK	1					
18	21C–F3110–00	..TUBO INTERIOR COMPLETO 1 ..INNER TUBE COMP.1	1					
19	2GS–F3171–00	..PISTON HORQUILLA DELANT. ..BUSH, INNER TUBE	1					
20	21C–F2674–00	..ARANDELA 2 ..WASHER 2	1					
21	B4G–F3103–00	.HORQUILLA DELANTERA COMPL.(MD) .FRONT FORK ASSY (R.H)	1					
22	B9E–F3136–00	..TUBO EXTERIOR 2 ..TUBE, OUTER 2	1					
23	21C–F3114–00	..EMPAQUE ..GASKET	1					
24	21C–F3111–00	..PERNO DE TAPA ..BOLT, CAP	1					
25	21C–F3118–00	..SEPARADOR ..SPACER	1					
26	21C–F3149–00	..ARANDELA DE RESORTE SUPERIOR ..WASHER, SPRING UPPER	1					
27	21C–F3141–00	..RESORTE HORQUILLA DELANT. ..SPRING, FRONT FORK	1					

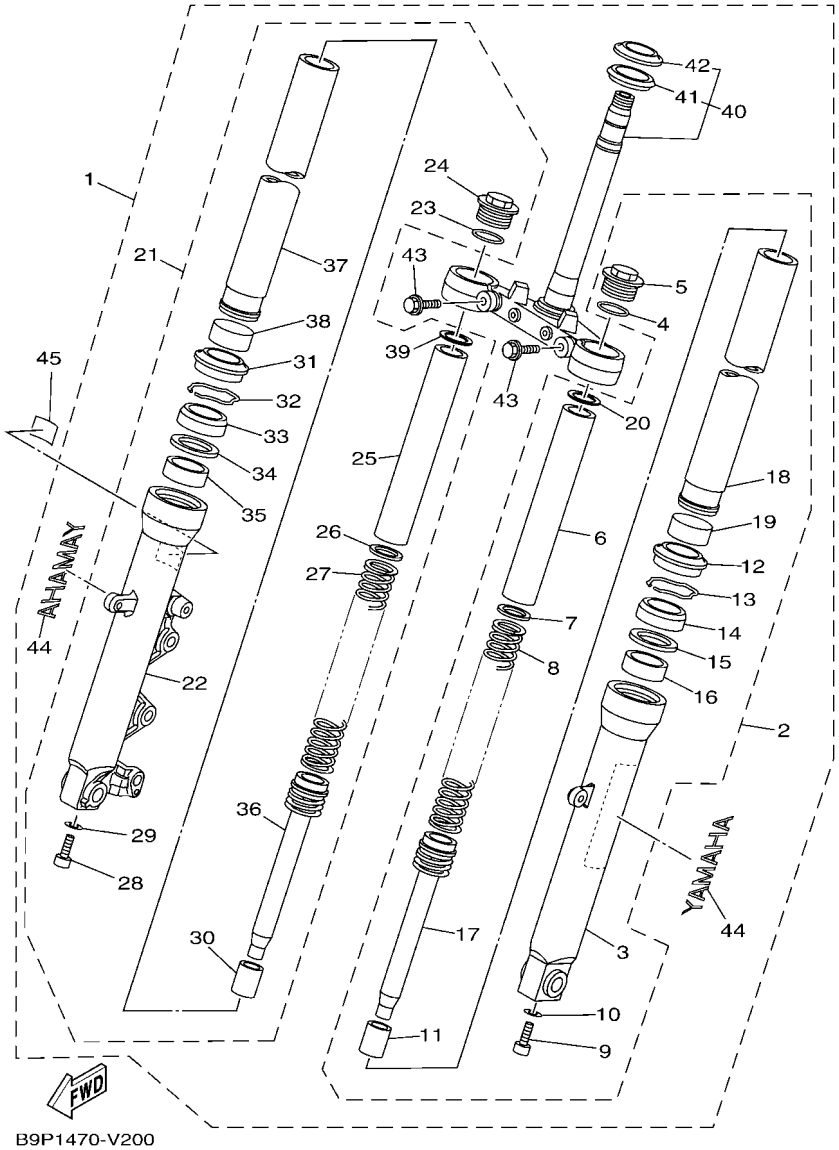

FIG. 20 HORQUILLA DELANTERA — FRONT FORK

REF. Nº	CODIGO Nº PART NO.	DESCRIPCION DESCRIPTION	BGB1					OBSERVACIONES REMARKS
28	21C–F3181–00	..TORNILLO CABEZAHEXAGONAL ..BOLT, HEXAGON SOCKET HEAD	1					
29	21C–F3158–00	..EMPAQUE ..GASKET	1					
30	21C–F3173–00	..VASTAGO AHUSADO ..SPINDLE, TAPER	1					
31	2GS–F3144–00	..GUARDAPOLVO ..SEAL, DUST	1					
32	21C–F3156–00	..ANILLO DE ENGANCHE ..RING, SNAP	1					
33	2GS–F3145–00	..RETEN DE ACEITE ..OIL SEAL	1					
34	21C–F3146–00	..ARANDELA DE SELLO DE ACEITE ..WASHER, OIL SEAL	1					
35	4FM–23125–40	..METAL CORREDIZO 1 ..METAL, SLIDE 1	1					
36	2GS–F3170–00	..CILINDRO COMPL DE HORQ DELANT ..CYLINDER COMP., FRONT FORK	1					
37	21C–F3110–00	..TUBO INTERIOR COMPLETO 1 ..INNER TUBE COMP.1	1					
38	2GS–F3171–00	..PISTON HORQUILLA DELANT. ..BUSH, INNER TUBE	1					
39	21C–F2674–00	..ARANDELA 2 ..WASHER 2	1					
40	21C–F3340–00	.PLATINA INFERIOR COMPLETA .UNDER BRACKET COMP.	1					
41	5YY–F3462–00	..SELLO PARA POLVO ..SEAL, DUST	1					
42	21C–F3411–00	..PISTA DE BOLAS 1 ..RACE, BALL 1	1					
43	21C–F3346–00	.PERNO 1 .BOLT 1	2					
44	2GS–F339E–00	.GRAFICO .GRAPHIC 1	2					
45	BC4–F4595–00	PROTECTOR PROTECTOR	1					

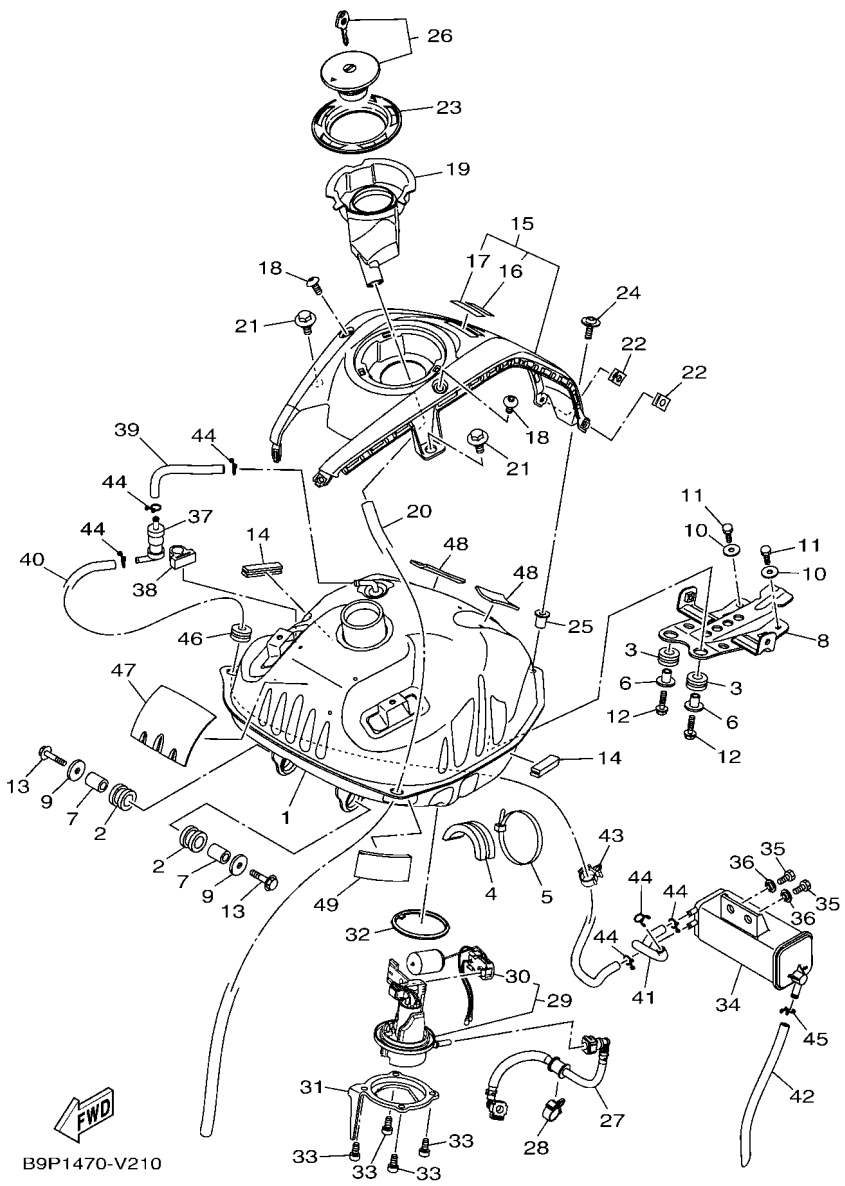

FIG. 21 DEPOSITO DE COMBUSTIBLE — FUEL TANK

REF. Nº	CODIGO Nº PART NO.	DESCRIPCION DESCRIPTION	BGB1					OBSERVACIONES REMARKS
1	B4G–F4110–00	DEPOSITO DE COMBUSTIBLE COMP. FUEL TANK COMP.	1					
2	21C–F4181–00	AMORTIGUADOR DE MONTAJE 1 DAMPER, LOCATING 1	2					
3	90480–15363	TAPON GROMMET	2					
4	21C–F4183–00	AMORTIGUADOR DE MONTAJE 3 DAMPER, LOCATING 3	1					
5	90464–80802	BRIDA CLAMP	1					
6	90387–068B2	ESPACIADOR COLLAR	2					
7	90387–107H6	ESPACIADOR COLLAR	2					
8	B4G–F4191–00	SOPORTE DEPOSITO DE COMBUST.1 BRACKET, FUEL TANK 1	1					
9	90201–060A3	ARANDELA PLANA WASHER, PLATE	2					
10	90201–06380	ARANDELA PLANA WASHER PLAIN	2					
11	97012–06014	PERNO BOLT	2					
12	90105–06169	TORNILLO BOLT, FLANGE	2					
13	95822–06030	TORNILLO DE REBORDE BOLT, FLANGE	2					
14	B97–F4188–00	MOLDURA DEPOSITO COMBUST. MOLD, FUEL TANK	2					
15	B4G–XF17D–00	CUBIERTA, TECHO COVER, TOP	1					
16	B4G–F4549–00	.EMBLEMA .EMBLEM	1					
17	B97–F1568–00	.ETIQUETA DE PRECAUCION .LABEL, WARNING	1					
18	90160–05808	TORNILLO REDONDO ROSCA HEMBRA SCREW, ROUND TAPPING	2					
19	B4G–F414A–00	CUBIERTA DE LLENADOR COVER, FILLER	1					
20	90445–14811	TUBO HOSE	1					
21	90109–06887	PERNO BOLT	2					
22	90183–05807	TUERCA DE RESORTE NUT, SPRING	2					
23	21C–F4614–00–P0	PLACA DE TAPA PLATE, CAP	1					S8 S8
24	90159–05065	TORNILLO CON VALONA SCREW, WITH WASHER	1					
25	90179–05804	TUERCA NUT	1					
26	21C–WF461–40	TAPA DE DEPOSITO COMPLETO CAP ASSY WITH LOCK	1					
27	B9P–E3971–00	ANILLO DE ESPACIADOR PIPE, FUEL 1	1					

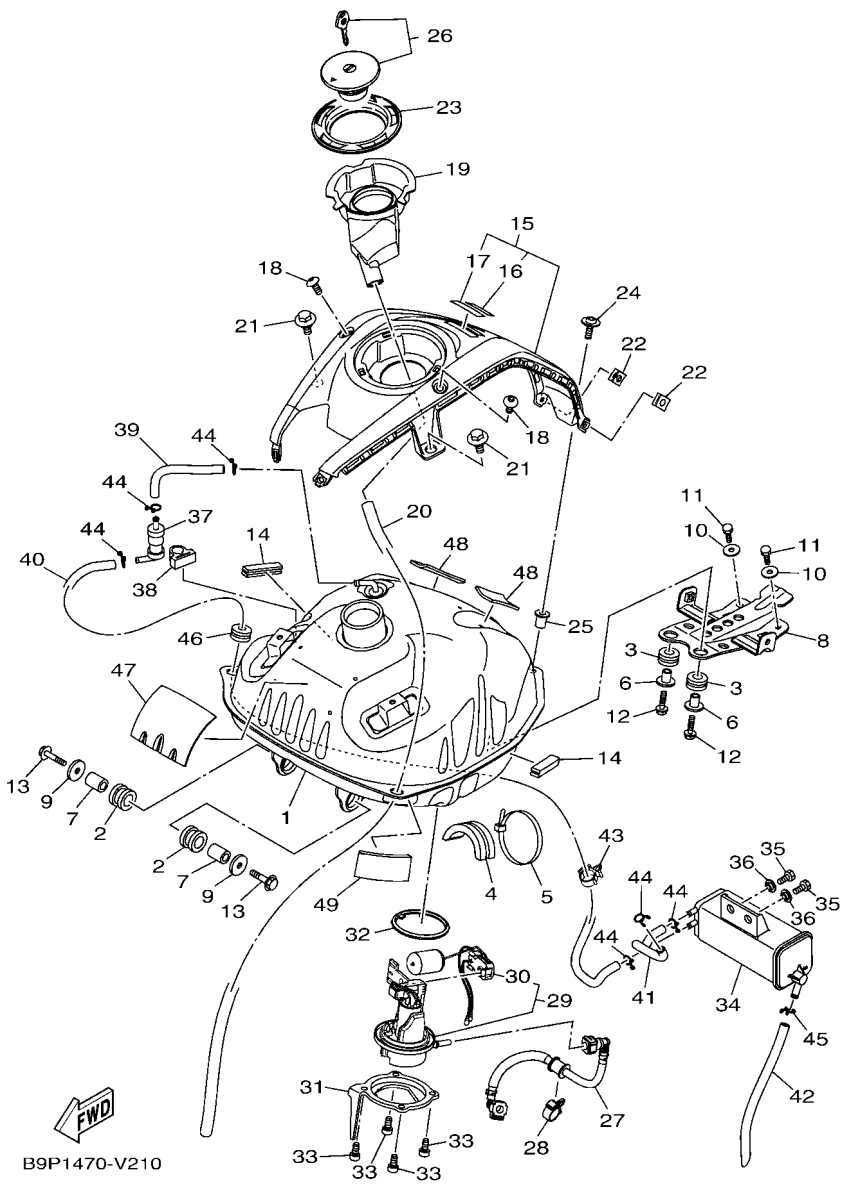

FIG. 21 DEPOSITO DE COMBUSTIBLE — FUEL TANK

REF. Nº	CODIGO Nº PART NO.	DESCRIPCION DESCRIPTION	BGB1					OBSERVACIONES REMARKS
28	90464–16006	BRIDA CLAMP	1					
29	B9P–E3907–00	BOMBA DE COMBUSTIBLE COMPLETA FUEL PUMP COMP.	1					
30	B9P–H5752–00	.UNIDAD TRANSM. MED. COMBUST. .SENDER UNIT ASSY, FUEL METER	1					
31	B7J–F4491–00	SOPORTE BOMBA COMBUSTIBLE BRACKET, FUEL PUMP	1					
32	2GS–F414G–00	SELLO SEAL	1					
33	91332–05010	PERNO BOLT	4					
34	2GS–F4170–00	FRANJA DE DEPOSITO DE COMBUST. CANISTER ASSY	1					UR UR
	2GS–F4170–20	FRANJA DE DEPOSITO DE COMBUST. CANISTER ASSY	1					UR UR
35	97012–06014	PERNO BOLT	2					
36	90387–06048	ESPACIADOR COLLAR	2					
37	2GS–F4180–00	FRANJA DE DEPOSITO DE COMBUST. ROLL OVER VALVE ASSY	1					
38	2GS–F419A–00	SOSTEN HOLDER	1					
39	90445–10837	TUBO HOSE	1					
40	B4G–F4313–00	TUBO 3 PIPE 3	1					
41	2GS–F4314–00	TUBO 4 PIPE 4	1					
42	2GS–F4315–00	TUBO DE DESAGUE PIPE 5	1					
43	90464–16006	BRIDA CLAMP	1					
44	90467–09006	PRESILLA CLIP	6					
45	90467–100A1	PRESILLA CLIP	1					
46	90480–15363	TAPON GROMMET	1					
47	90520–02845	EQUILIBRIO, CUBIERTA DAMPER, PLATE	1					
48	90520–03829	EQUILIBRIO, CUBIERTA DAMPER, PLATE	2					
49	90520–08813	EQUILIBRIO, CUBIERTA DAMPER, PLATE	1					

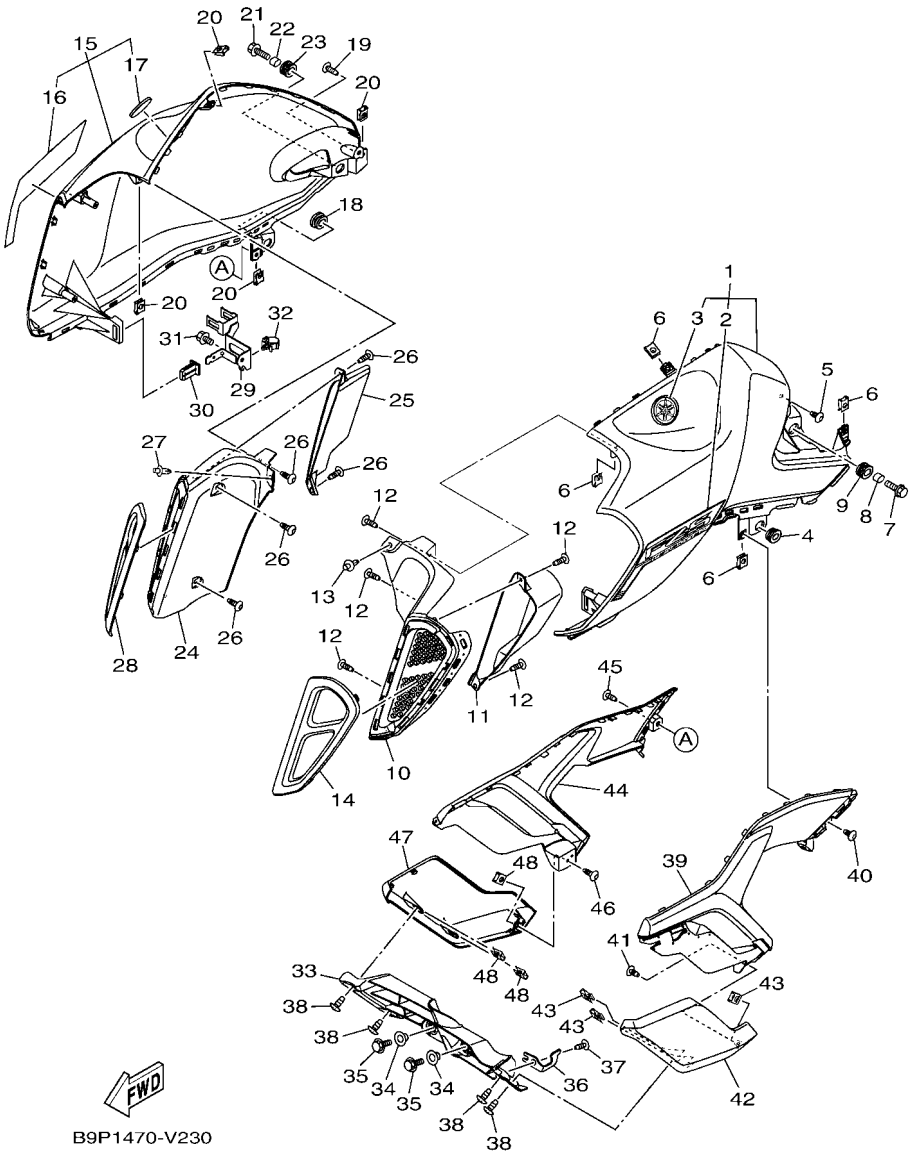

FIG. 22 DEPOSITO DE COMBUSTIBLE 2 — FUEL TANK 2

REF. Nº	CODIGO Nº PART NO.	DESCRIPCION DESCRIPTION	BGB1					OBSERVACIONES REMARKS
1	B4G–XF412–00–P2	CUBIERTA LATERAL 1 TANK SIDE COVER 1	1					UR PARA MBL2 UR FOR MBL2
	B4G–XF412–10–P3	CUBIERTA LATERAL 1 TANK SIDE COVER 1	1					UR PARA MNM3 UR FOR MNM3
	B4G–XF412–20–P4	CUBIERTA LATERAL 1 TANK SIDE COVER 1	1					UR PARA MDPBM1 UR FOR MDPBM1
	B4G–XF412–00–P5	CUBIERTA LATERAL 1 TANK SIDE COVER 1	1					UR PARA VRC1 UR FOR VRC1
2	B4G–F4246–00	.CALCOMANIA 3 .GRAPHIC 3	1					UR PARA MBL2 UR FOR MBL2
	B4G–F4246–10	.CALCOMANIA 3 .GRAPHIC 3	1					UR PARA MNM3 UR FOR MNM3
	B4G–F4246–20	.CALCOMANIA 3 .GRAPHIC 3	1					UR PARA MDPBM1 UR FOR MDPBM1
	B4G–F4246–30	.CALCOMANIA 3 .GRAPHIC 3	1					UR PARA VRC1 UR FOR VRC1
3	B4G–F413B–00	.EMBLEMA .EMBLEM	1					
4	90480–01559	TAPON GROMMET	1					
5	90160–05808	TORNILLO REDONDO ROSCA HEMBRA SCREW, ROUND TAPPING	1					
6	90183–05807	TUERCA DE RESORTE NUT, SPRING	4					
7	95822–06020	TORNILLO DE REBORDE BOLT, FLANGE	1					
8	20P–F1749–00	COLLAR COLLAR	1					
9	90480–01811	TAPON GROMMET	1					
10	B4G–F836K–00	PANEL 1 PANEL, INNER 1	1					
11	B4G–F8396–00	PLACA 1 PLATE 1	1					
12	97707–50016	TORNILLO SCREW, TRUSS HEAD TAPPING	5					
13	90269–06813	REMACHE RIVET	1					
14	B4G–F837N–00	REJILLA, ADMISION DE AIRE 1 GRILL, AIR INTAKE 1	1					
15	B4G–XF413–00–P2	CUBIERTA LATERAL 2 TANK SIDE COVER 2	1					UR PARA MBL2 UR FOR MBL2
	B4G–XF413–10–P3	CUBIERTA LATERAL 2 TANK SIDE COVER 2	1					UR PARA MNM3 UR FOR MNM3
	B4G–XF413–20–P4	CUBIERTA LATERAL 2 TANK SIDE COVER 2	1					UR PARA MDPBM1 UR FOR MDPBM1
	B4G–XF413–00–P5	CUBIERTA LATERAL 2 TANK SIDE COVER 2	1					UR PARA VRC1 UR FOR VRC1
16	B4G–F4247–00	.CALCOMANIA DEP. .GRAPHIC	1					UR PARA MBL2 UR FOR MBL2
	B4G–F4247–10	.CALCOMANIA DEP. .GRAPHIC	1					UR PARA MNM3 UR FOR MNM3
	B4G–F4247–20	.CALCOMANIA DEP. .GRAPHIC	1					UR PARA MDPBM1 UR FOR MDPBM1

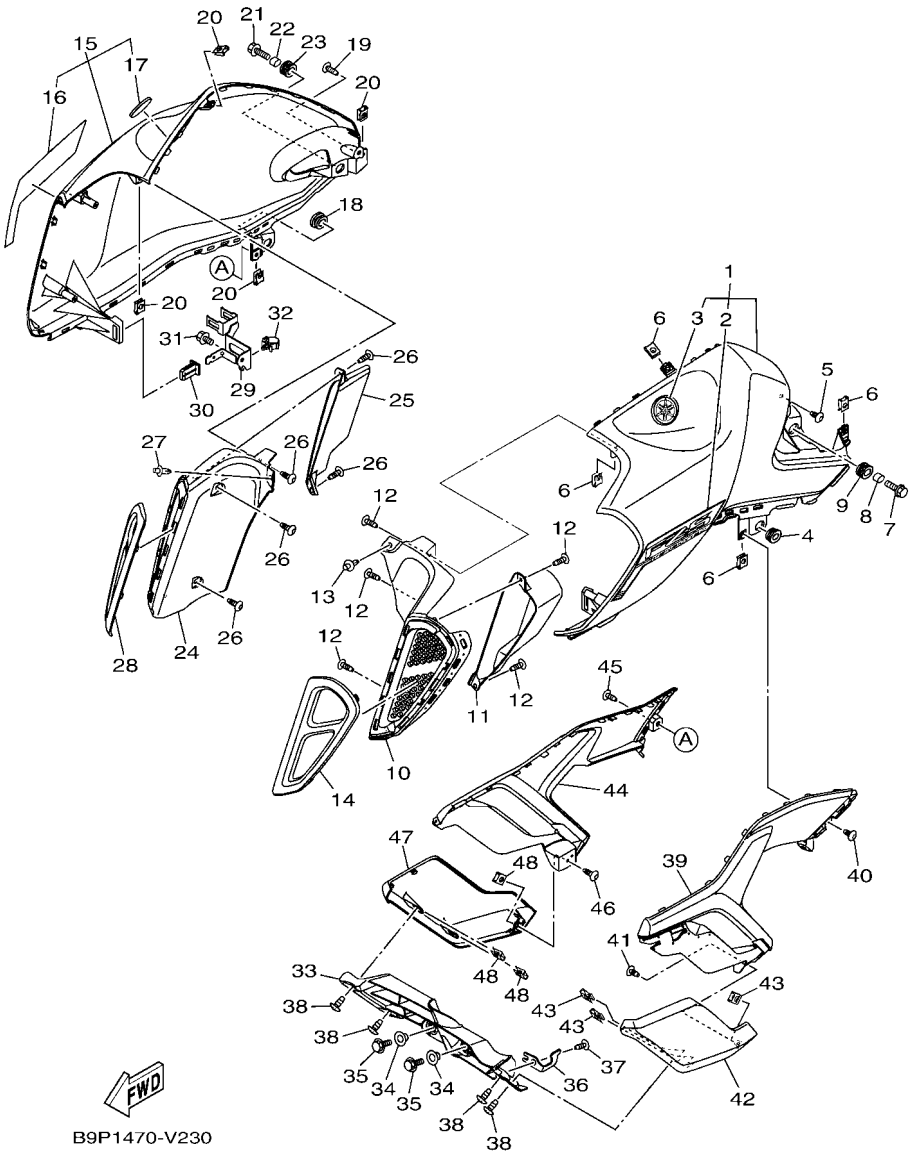

FIG. 22 DEPOSITO DE COMBUSTIBLE 2 — FUEL TANK 2

REF. Nº	CODIGO Nº PART NO.	DESCRIPCION DESCRIPTION	BGB1					OBSERVACIONES REMARKS
16	B4G–F4247–30	.CALCOMANIA DEP. .GRAPHIC	1					UR PARA VRC1 UR FOR VRC1
17	B4G–F413B–00	.EMBLEMA .EMBLEM	1					
18	90480–01559	TAPON GROMMET	1					
19	90160–05808	TORNILLO REDONDO ROSCA HEMBRA SCREW, ROUND TAPPING	1					
20	90183–05807	TUERCA DE RESORTE NUT, SPRING	4					
21	95822–06020	TORNILLO DE REBORDE BOLT, FLANGE	1					
22	20P–F1749–00	COLLAR COLLAR	1					
23	90480–01811	TAPON GROMMET	1					
24	B4G–F836L–00	PANEL 2 PANEL, INNER 2	1					
25	B4G–F8397–00	PLACA 2 PLATE 2	1					
26	97707–50016	TORNILLO SCREW, TRUSS HEAD TAPPING	5					
27	90269–06813	REMACHE RIVET	1					
28	B4G–F837R–00	REJILLA, ADMISION DE AIRE 2 GRILL, AIR INTAKE 2	1					
29	B4G–F411H–00	CUBIERTA COMPL. 2, GUIA DE AIR HOOK, SIDE COVER 2	1					
30	45S–F1778–00	AMORTIGUADOR DE MONTAJE DAMPER, LOCATING 1	1					
31	95812–06012	TORNILLO DE REBORDE BOLT, FLANGE	1					
32	90464–16006	BRIDA CLAMP	1					
33	B4G–F4124–00	ARO RESF DE AIRE AIR SHROUD	1					
34	90387–06048	ESPACIADOR COLLAR	2					
35	95827–06012	TORNILLO BOLT, FLANGE	2					
36	2GS–F4364–00	SOPORTE STAY	1					
37	97702–50012	TORNILLO ROSCA HEMBRA SCREW, TAPPING	1					
38	97707–50012	TORNILLO SCREW, TRUSS HEAD TAPPING	4					
39	B4G–F137U–00	GUIA DE AIRE 1 GUIDE, AIR 1	1					
40	97702–50012	TORNILLO ROSCA HEMBRA SCREW, TAPPING	1					
41	97707–50012	TORNILLO SCREW, TRUSS HEAD TAPPING	1					
42	B4G–F137W–00–P0	CUBIERTA DE GUIA DE AIRE 1 SCOOP, AIR 1	1					SMX PARA MBL2 SMX FOR MBL2

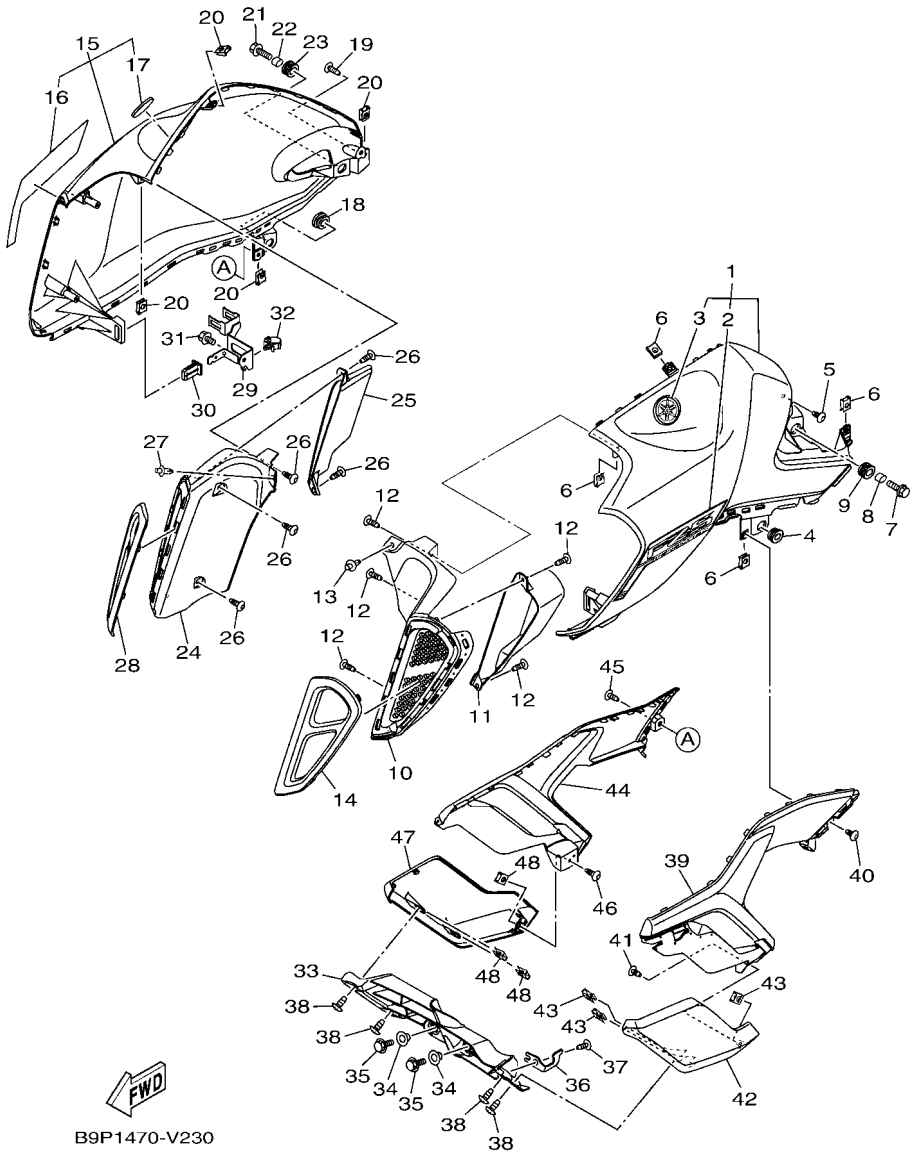

FIG. 22 DEPOSITO DE COMBUSTIBLE 2 — FUEL TANK 2

REF. Nº	CODIGO Nº PART NO.	DESCRIPCION DESCRIPTION	BGB1					OBSERVACIONES REMARKS
42	B4G–F137W–00–P3	CUBIERTA DE GUIA DE AIRE 1 SCOOP, AIR 1	1					CM6 PARA MNM3 CM6 FOR MNM3
	B4G–F137W–00–P4	CUBIERTA DE GUIA DE AIRE 1 SCOOP, AIR 1	1					MNM3 PARA MDPBM1 MNM3 FOR MDPBM1
	B4G–F137W–00–P5	CUBIERTA DE GUIA DE AIRE 1 SCOOP, AIR 1	1					PARA VRC1 FOR VRC1
43	90183–05807	TUERCA DE RESORTE NUT, SPRING	3					
44	B4G–F137V–00	GUIA DE AIRE 2 GUIDE, AIR 2	1					
45	97702–50012	TORNILLO ROSCA HEMBRA SCREW, TAPPING	1					
46	97707–50012	TORNILLO SCREW, TRUSS HEAD TAPPING	1					
47	B4G–F137X–00–P0	CUBIERTA DE GUIA DE AIRE 2 SCOOP, AIR 2	1					SMX PARA MBL2 SMX FOR MBL2
	B4G–F137X–00–P3	CUBIERTA DE GUIA DE AIRE 2 SCOOP, AIR 2	1					CM6 PARA MNM3 CM6 FOR MNM3
	B4G–F137X–00–P4	CUBIERTA DE GUIA DE AIRE 2 SCOOP, AIR 2	1					MNM3 PARA MDPBM1 MNM3 FOR MDPBM1
	B4G–F137X–00–P5	CUBIERTA DE GUIA DE AIRE 2 SCOOP, AIR 2	1					PARA VRC1 FOR VRC1
48	90183–05807	TUERCA DE RESORTE NUT, SPRING	3					

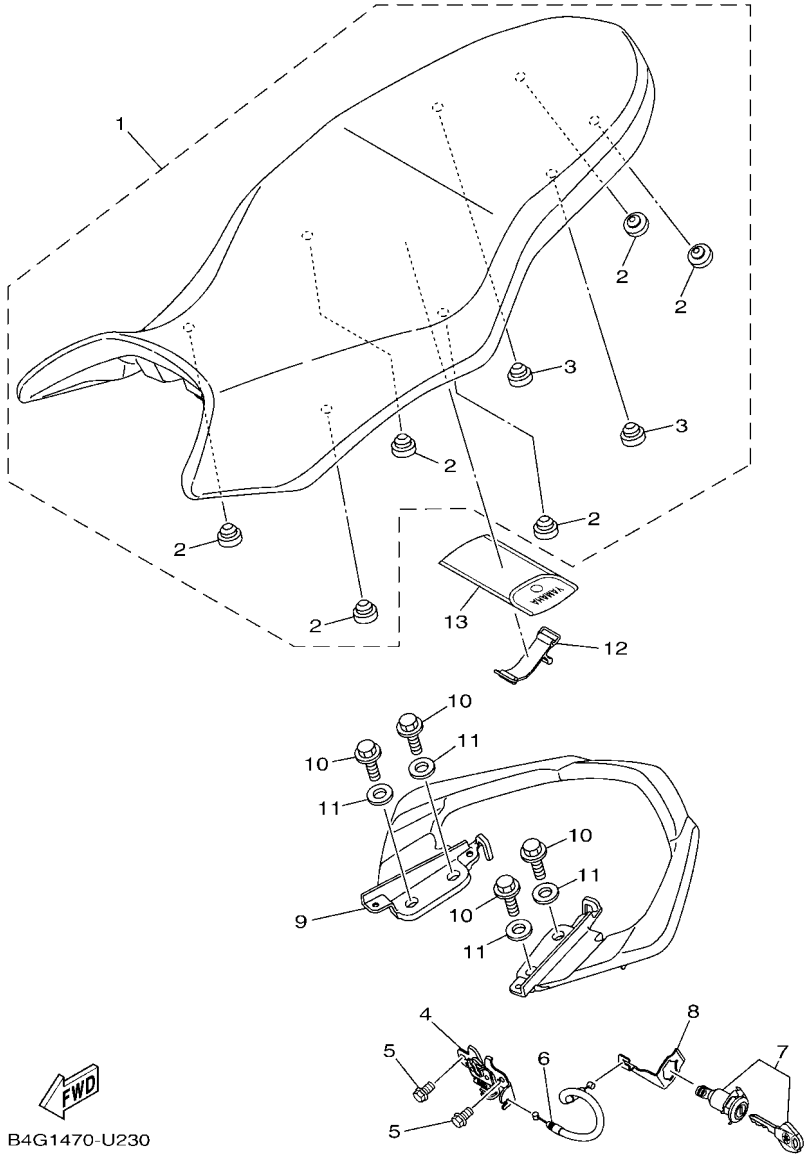

FIG. 23 ASIENTO — SEAT

REF. Nº	CODIGO Nº PART NO.	DESCRIPCION DESCRIPTION	BGB1					OBSERVACIONES REMARKS
1	B4G–F4730–00	SILLIN DOBLE COMPLETO DOUBLE SEAT ASSY	1					
2	1PM–F4741–00	.COJIN DE ASIENTO .PAD, SEAT	6					
3	4LS–F4741–00	.COJIN DE ASIENTO .PAD, SEAT	2					
4	21C–F4780–01	CERRADURA SILLIN COMPLETO SEAT LOCK ASSY	1					
5	95022–06010	PERNO, DE BRIDA BOLT, FLANGE	2					
6	B4G–F478E–00	CABLE CABLE, SEAT LOCK	1					
7	1GC–WF479–00	CUBIERTA, DE COLA ROTOR SUB ASSY WITH KEY	1					
8	B4G–F117K–00	SOPORTE DE CERRADURA STAY, LOCK	1					
9	B4G–F4773–00	MANIJA DE ASIENTO HANDLE, SEAT	1					
10	95812–08025	TORNILLO DE REBORDE BOLT, FLANGE	4					
11	92902–08200	ARANDELA WASHER	4					
12	4UU–F811G–00	CINTA BAND	1					
13	B77–F8100–10	JUEGO DE HERRAMIENTAS TOOL KIT	1					

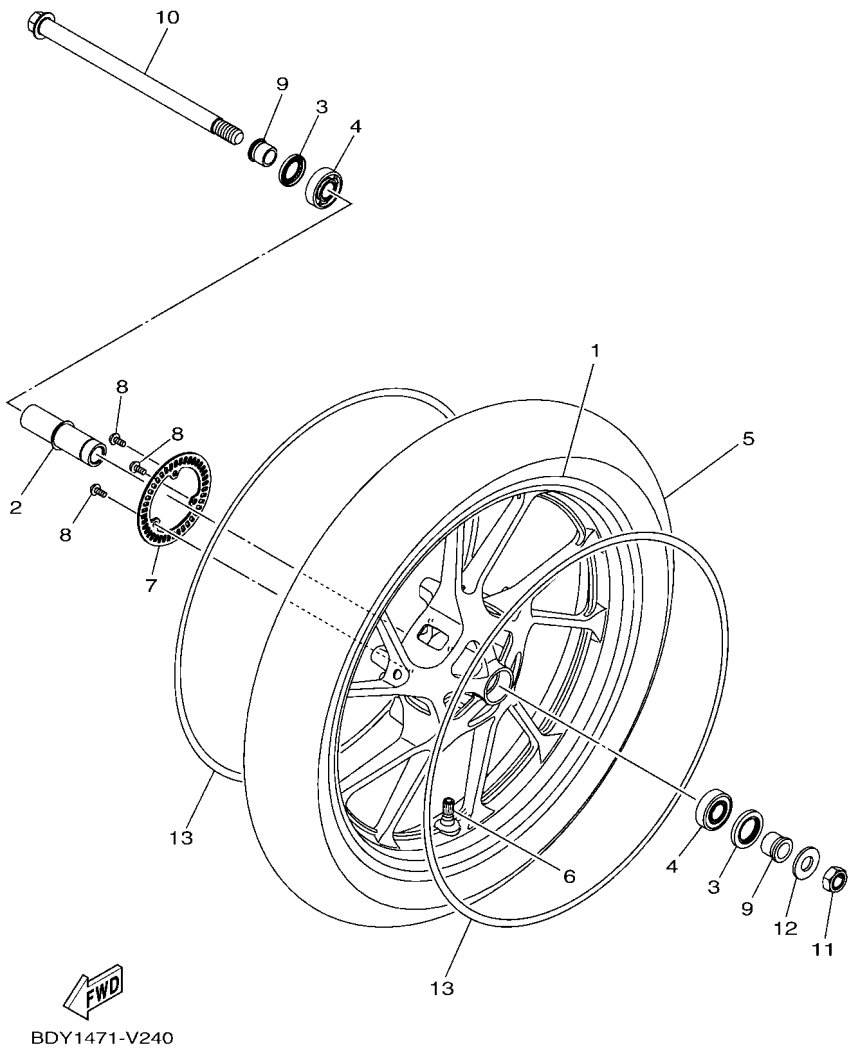

FIG. 24 RUEDA DELANTERA — FRONT WHEEL

REF. Nº	CODIGO Nº PART NO.	DESCRIPCION DESCRIPTION	BGB1					OBSERVACIONES REMARKS
1	B9E–F5168–00–33	RUEDA FUNDIDA DELANTERA CAST WHEEL, FRONT	1					YB YB
2	21C–F510C–10	COLLAR COLLAR ASSY.	1					
3	93106–22808	SELLO ACEITE OIL SEAL	2					
4	93306–252XG	COJINETE BEARING	2					UR UR
	93306–202XT	COJINETE BEARING	2					UR UR
5	94110–17818	NEUMATICO(100/80-17 MC 52P) TIRE (100/80-17 MC 52P)	1					UR MRF UR MRF
	94110–17824	NEUMATICO(100/80-17 MC 52P) TIRE (100/80-17 MC 52P)	1					UR CEAT UR CEAT
6	93900–00824	VALVULA VALVE, RIM	1					
7	B9E–F517G–00	ROTOR DE SENSOR ROTOR, SENSOR	1					
8	90149–05030	TORNILLO DE REGLAJE SCREW	3					
9	1CK–F5186–00	COLLAR DE RUEDA COLLAR, WHEEL	2					
10	21C–F5181–00	EJE DE LA RUEDA AXLE, WHEEL	1					
11	90185–14800	TUERCA AUTOBLOCANTE NUT, SELF-LOCKING	1					
12	92907–14200	ARANDELA WASHER	1					
13	B4G–F531B–00	EMBLEMA DE RUEDA EMBLEM, WHEEL	2					UR PARA MBL2,MNM3 UR FOR MBL2,MNM3
	B4G–F531B–10	EMBLEMA DE RUEDA EMBLEM, WHEEL	2					UR PARA MDPBM1 UR FOR MDPBM1
	B4G–F531B–20	EMBLEMA DE RUEDA EMBLEM, WHEEL	2					UR PARA VRC1 UR FOR VRC1

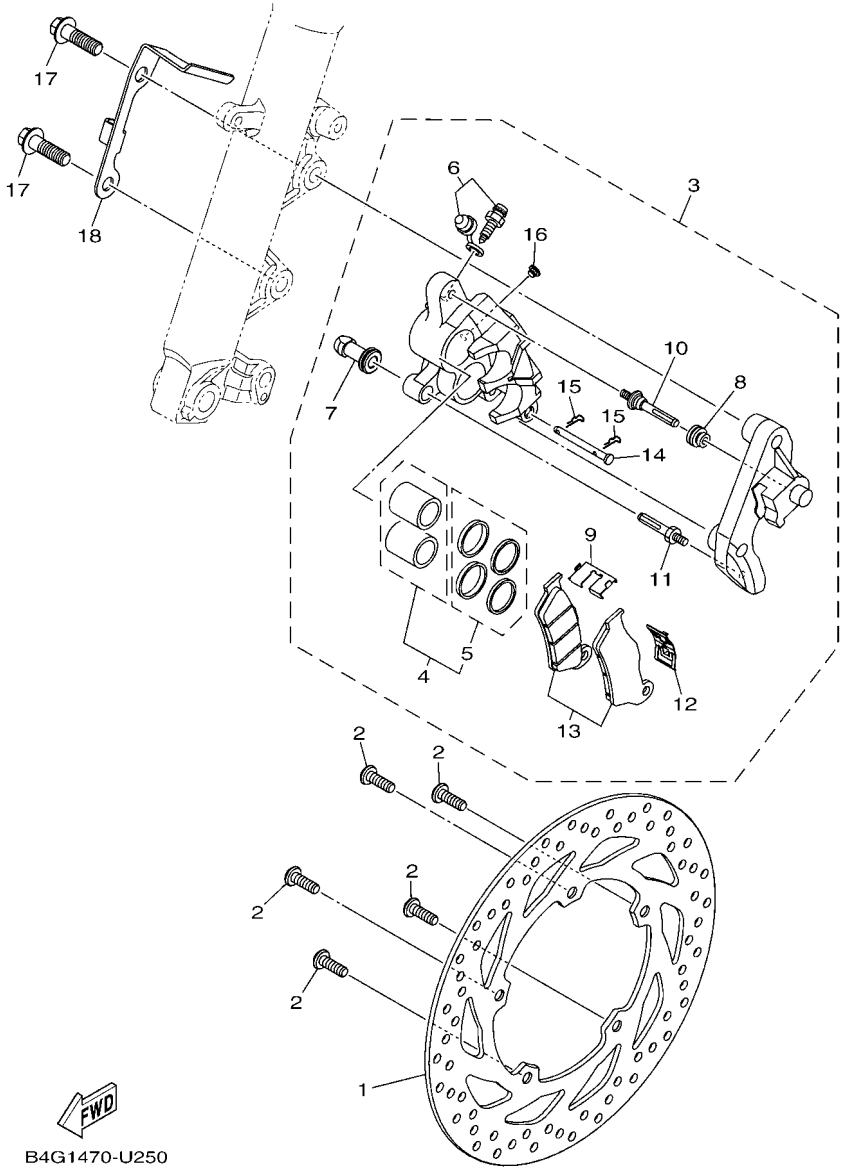

FIG. 25 CALIBRE FRENO DELANTERA — FRONT BRAKE CALIPER

REF. Nº	CODIGO Nº PART NO.	DESCRIPCION DESCRIPTION	BGB1					OBSERVACIONES REMARKS
1	B97–F582U–00	DISCO DE FRENO (DERECHO) DISK, BRAKE (RIGHT)	1					
2	90111–08029	TORNILLO BOLT,HEX. SOCKET BUTTON	5					
3	B9E–F580U–00	CALIBRE COMPLETO (DERECHO) CALIPER ASSY (RIGHT)	1					
4	54B–W0057–00	.PISTON COMPLETO PINZA .PISTON ASSY, CALIPER	1					
5	54B–W0047–00	..JUEGO DE RETENES DE PINZA ..CALIPER SEAL KIT	1					
6	54B–W0048–00	.CJTO TORNILLO DE PURGA .BLEED SCREW KIT	1					
7	54B–F5937–00	.FUNDA .BOOT 2	1					
8	54B–F5917–00	.FUNDA DE CALIBRE .BOOT, CALIPER	1					
9	54B–F5939–00	.PRESILLA .CLIP, PAD	1					
10	54B–F5914–00	.PASADOR .PIN, SLIDE	1					
11	54B–F5926–00	.PERNO .BOLT	1					
12	54B–F5919–00	.SOPORTE DE PASTILLAS .SUPPORT, PAD	1					
13	B97–W0045–00	.JUEGO DE COJIN DE FRENO .BRAKE PAD KIT	1					
14	54B–F5924–00	.PASADOR .PIN, PAD	1					
15	54B–F5925–00	.PRESILLA .CLIP	2					
16	54B–F5916–00	.TAPON .PLUG	1					
17	90105–10319	TORNILLO BOLT, FLANGE	2					
18	B4G–F3317–00	SOSTEN DE CABLE HOLDER, CABLE	1					

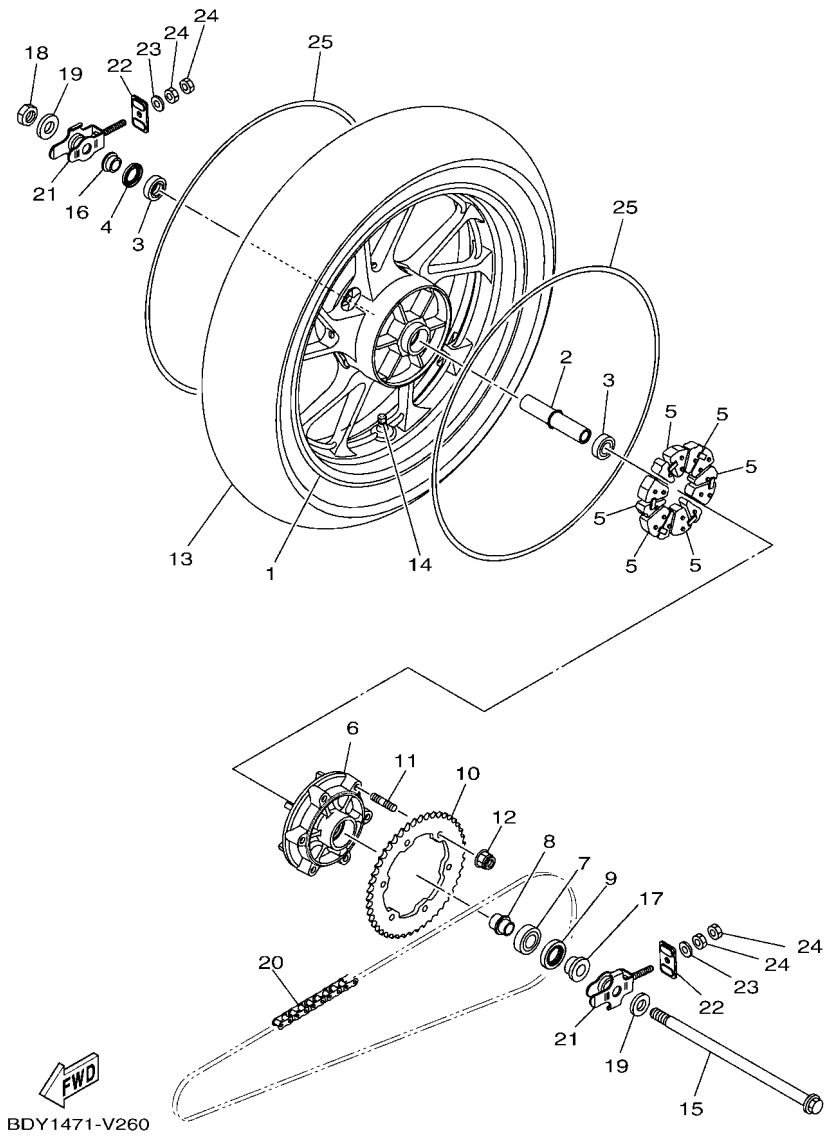

FIG. 26 RUEDA TRASERA — REAR WHEEL

REF. Nº	CODIGO Nº PART NO.	DESCRIPCION DESCRIPTION	BGB1					OBSERVACIONES REMARKS
1	B97–F5338–01–33	RUEDA FUNDIDA TRASERA CAST WHEEL, REAR	1					YB YB
2	B97–F530S–00	ASAMBLEA DE COLLAR COLLAR ASSY	1					
3	93306–252XG	COJINETE BEARING	2					UR UR
	93306–202XT	COJINETE BEARING	2					UR UR
4	93106–22808	SELLO ACEITE OIL SEAL	1					
5	B97–F5364–00	AMORTIGUADOR DAMPER	6					
6	B97–F5366–00	EMBRAGUE DE MASA CLUTCH, HUB	1					
7	93306–054YA	COJINETE BEARING	1					
8	B97–F5376–00	COLLAR DE RUEDA COLLAR, WHEEL	1					
9	93106–26801	SELLO ACEITE OIL SEAL	1					
10	2GS–F5441–10	CORONA (41T) SPROCKET, DRIVEN (41T)	1					
11	90116–08826	ESPARRAGO BOLT, STUD	6					
12	95602–08200	TUERCA DE AUTO-CIERRE NUT, U FLANGE	6					
13	94114–17801	NEUMATICO(140/60 R17 MC 63P) TIRE (140/60 R17 MC 63P)	1					UR MRF UR MRF
	94114–17807	NEUMATICO(140/60 R17 MC 63P) TIRE (140/60 R17 MC 63P)	1					UR CEAT UR CEAT
14	93900–00824	VALVULA VALVE, RIM	1					
15	21C–F5381–00	EJE DE RUEDA AXLE, WHEEL	1					
16	B97–F5377–00	COLLAR DE RUEDA COLLAR, WHEEL	1					
17	B97–F5383–00	COLLAR DE RUEDA COLLAR, WHEEL	1					
18	90185–14800	TUERCA AUTOBLOCANTE NUT, SELF-LOCKING	1					
19	90201–15814	ARANDELA PLANA WASHER, PLATE	2					
20	94568–K3128	CADENA (R428NAR 128L) CHAIN (R428NAR 128L)	1					UR UR
	94568–K6128	CADENA (DID428VIX3 128LE) CHAIN (DID428VIX3 128LE)	1					UR UR
21	21C–F5388–11	TIRADOR DE CADENA 1 PULLER, CHAIN 1	2					
22	21C–F2174–00	EXTREMO 1 END 1	2					
23	92902–08600	ARANDELA WASHER, PLATE	2					
24	95302–08600	TUERCA NUT, HEXAGON	4					

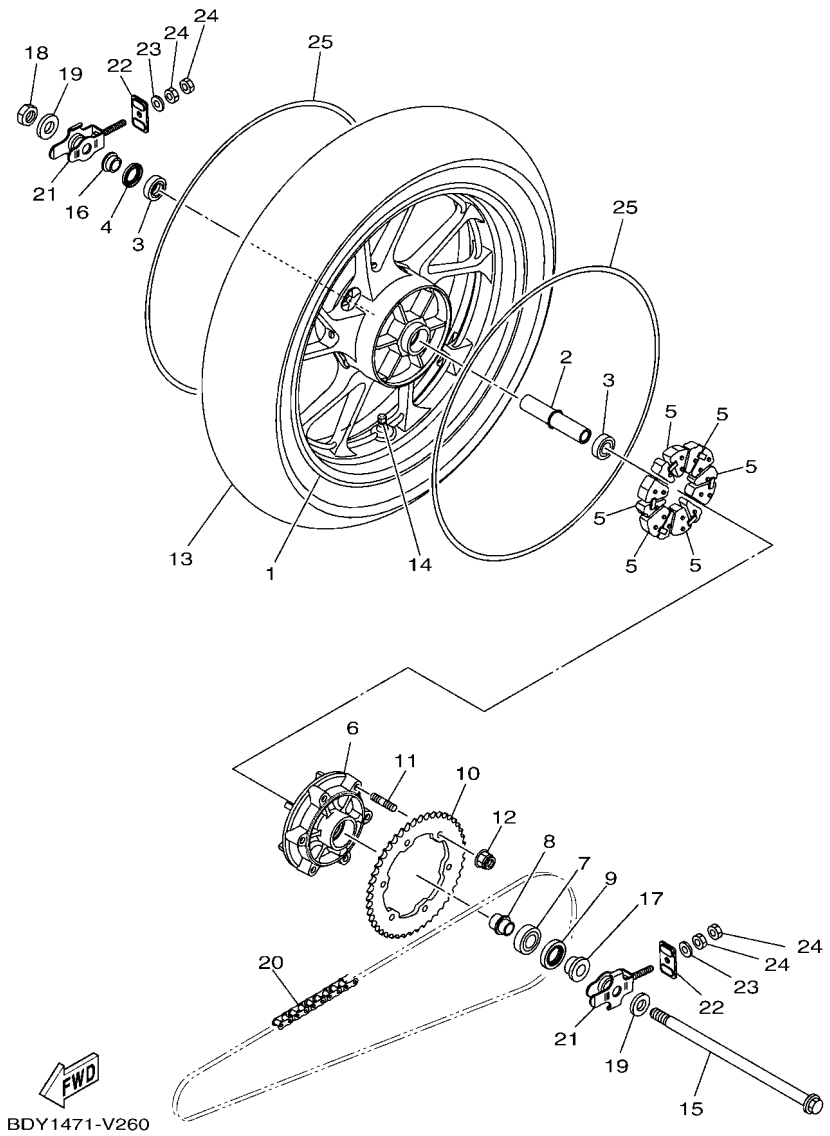

FIG. 26 RUEDA TRASERA — REAR WHEEL

REF. Nº	CODIGO Nº PART NO.	DESCRIPCION DESCRIPTION	BGB1					OBSERVACIONES REMARKS
25	B4G–F531B–00	EMBLEMA DE RUEDA EMBLEM, WHEEL	2					UR PARA MBL2,MNM3 UR FOR MBL2,MNM3
	B4G–F531B–10	EMBLEMA DE RUEDA EMBLEM, WHEEL	2					UR PARA MDPBM1 UR FOR MDPBM1
	B4G–F531B–20	EMBLEMA DE RUEDA EMBLEM, WHEEL	2					UR PARA VRC1 UR FOR VRC1

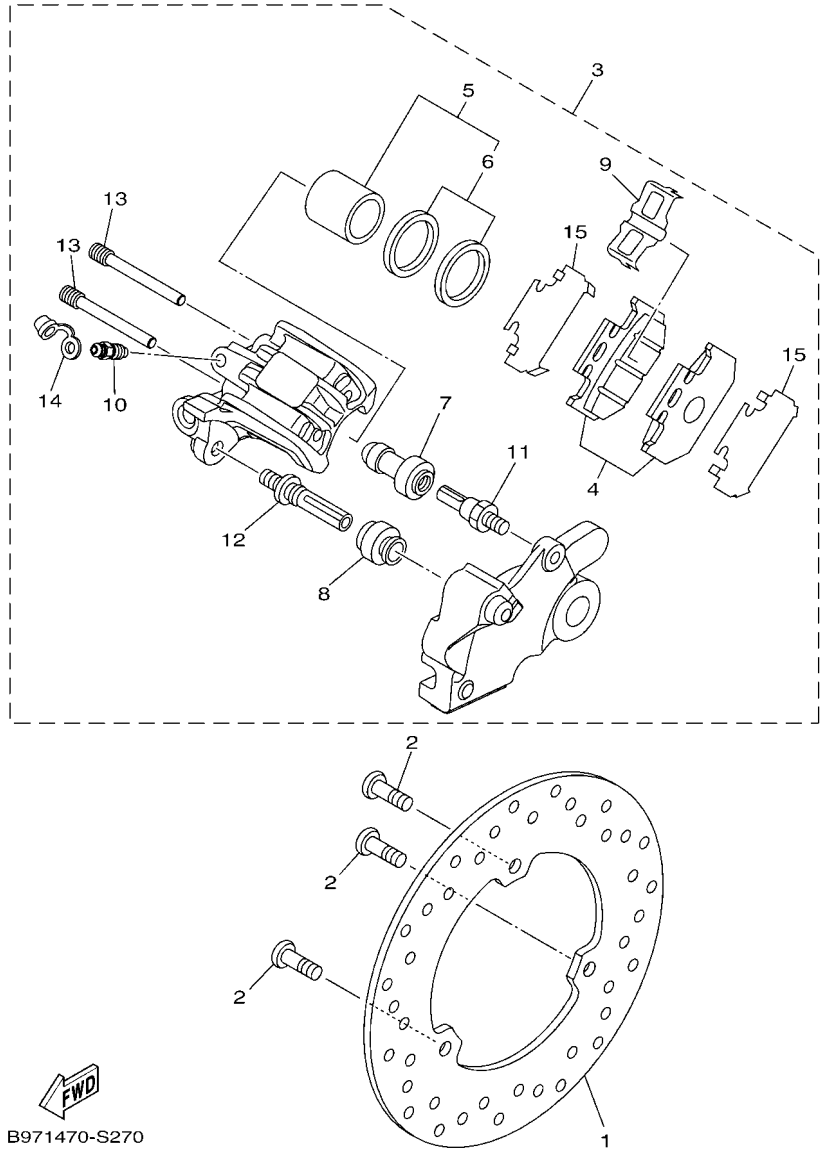

FIG. 27 CALIBRE FRENO TRASERA — REAR BRAKE CALIPER

REF. Nº	CODIGO Nº PART NO.	DESCRIPCION DESCRIPTION	BGB1					OBSERVACIONES REMARKS
1	B97–F582W–00	DISCO DE FRENO TRASEROS 2 DISK, REAR BRAKE 2	1					
2	90111–08029	TORNILLO BOLT,HEX. SOCKET BUTTON	3					
3	B97–F580W–00	CALIBRE COMPLETO TRASEROS 2 CALIPER ASSY, REAR 2	1					
4	B97–F5806–00	.JUEGO DE PASTILLAS DE FRENO 2 .BRAKE PAD KIT 2	1					
5	5XT–25802–50	.PISTON COMPLETO PINZA .PISTON ASSY, CALIPER	1					
6	3JD–25803–50	..JUEGO DE RETENES DE PINZA ..CALIPER SEAL KIT	1					
7	5HH–F5937–00	.FUNDA .BOOT 2	1					
8	5HH–F5917–00	.FUNDA DE CALIBRE .BOOT, CALIPER	1					
9	3SP–25919–51	.SOPORTE DE PASTILLAS .SUPPORT, PAD	1					
10	5HH–F5824–00	.TORNILLO DE RESPIRADERO .SCREW, BLEED	1					
11	5HH–F5914–00	.PASADOR .PIN, SLIDE	1					
12	3SP–25926–51	.PERNO .BOLT	1					
13	3SP–25924–51	.PASADOR .PIN, PAD	2					
14	5HH–F5825–51	.TAPA .CAP	1					
15	5XT–25827–00	.CUNA DE CALIBRE .SHIM, CALIPER	2					

FIG. 28 MANILLAR & CABLE — STEERING HANDLE & CABLE

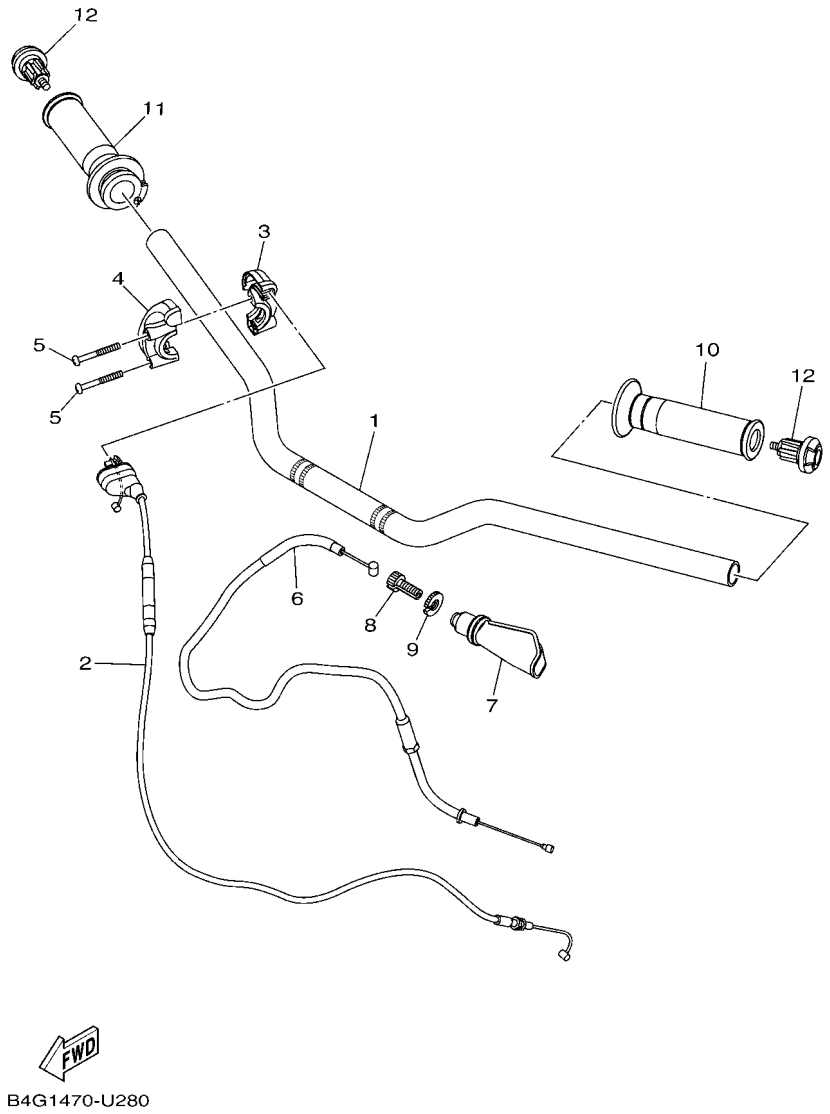

REF. Nº	CODIGO Nº PART NO.	DESCRIPCION DESCRIPTION	BGB1					OBSERVACIONES REMARKS
1	B4G–F6111–00	MANUBRIO HANDLEBAR	1					
2	B4G–F6311–00	CABLE DE ACELERADOR 1 WIRE, THROTTLE 1	1					
3	B4G–F6281–00	TAPA DE EMPUNADURA SUPERIOR CAP, GRIP UPPER	1					
4	B4G–F6282–00	TAPA, EMPUNADURA INFERIOR CAP, GRIP UNDER	1					
5	98507–05040	TORNILLO DE CABEZA PLANA SCREW, PAN HEAD	2					
6	B4G–F6335–00	CABLE DE EMBRAGUE WIRE, CLUTCH	1					
7	4TL–F6372–00	CUBIERTA DE PALANCA DE MANUB 1 COVER, HANDLE LEVER 1	1					
8	90123–08046	PERNO BOLT	1					
9	90179–08148	TUERCA NUT	1					
10	B1N–F6241–00	EMPUNADURA GRIP	1					
11	B1N–F6240–00	EMPUNADURA COMPLETA GRIP ASSY	1					
12	21C–F620B–40	EXTREMO DE EMPUNADURA END GRIP ASSY	2					

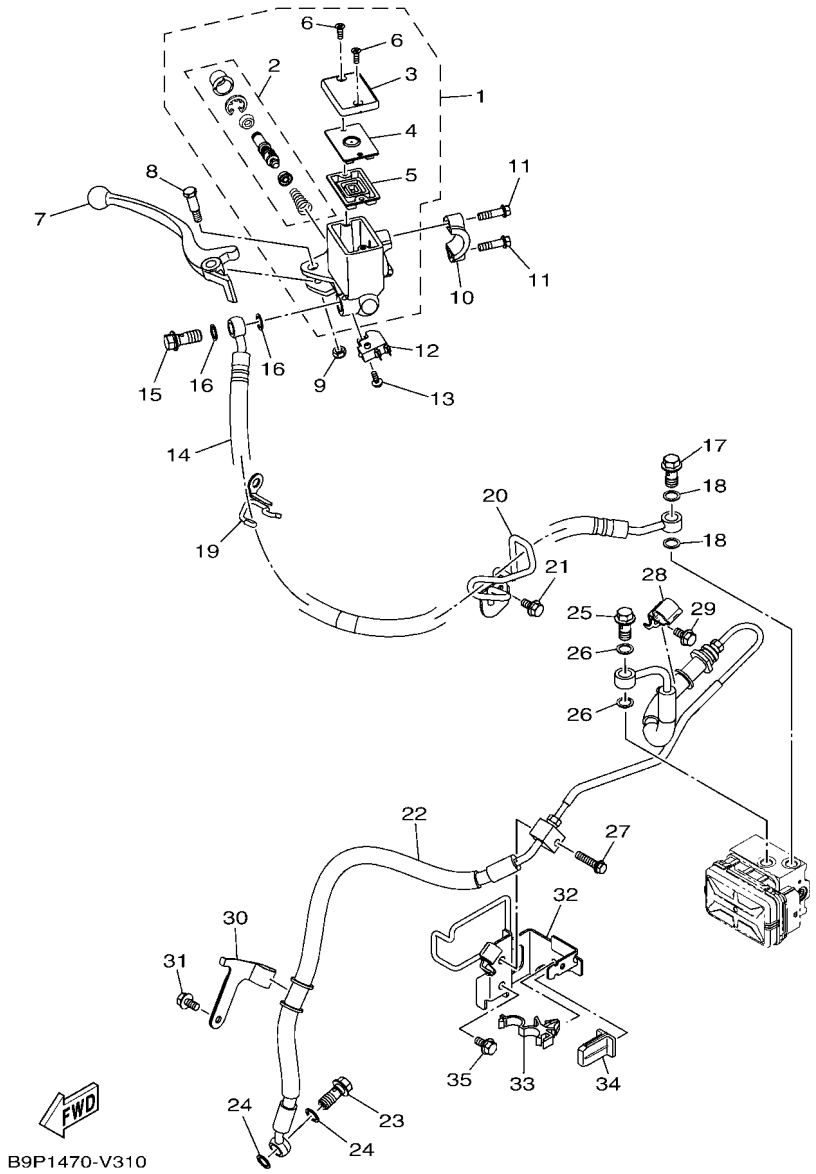

FIG. 29 CILINDRO MAESTRO DELANTERO — FRONT MASTER CYLINDER

REF. Nº	CODIGO Nº PART NO.	DESCRIPCION DESCRIPTION	BGB1					OBSERVACIONES REMARKS
1	B9E–F580A–00	CILINDRO MAESTRO SUB COMPLET 2 MASTER CYLINDER SUB ASSY 2	1					
2	2DP–F5807–10	.JUEGO DE CILINDRO MAESTRO .CYLINDER KIT, MASTER	1					
3	3GM–F5852–00	.TAPA DE TANQUE DE RESERVA .CAP, RESERVOIR	1					
4	3GM–F585B–00	.PLACA, DIAFRAGMA .PLATE, DIAPHRAGM	1					
5	55U–F5854–00	.EMPAQUE,DIAFRAGMA .DIAPHRAGM, RESERVOIR	1					
6	98707–04012	.TORNILLO DE CABEZA PLANA .SCREW, FLAT HEAD	2					
7	B9E–H3922–00	PALANCA 2 LEVER 2	1					
8	2DP–F589F–00	PERNO DE PALANCA BOLT, LEVER	1					
9	95602–06100	TUERCA AUTOBLOCANTE NUT, SELF-LOCKING	1					
10	18D–F5867–00	SOPORTE DE CILINDRO MAESTRO BRACKET, MASTER CYLINDER	1					
11	5HH–F6332–00	TORNILLO BOLT, FLANGE	2					
12	2LP–H3980–10	INTERRUP. DE PARADA DELANTERO FRONT STOP SWITCH ASSY	1					
13	97602–04312	TORNILLO CON RONDONA SCREW, PAN HEAD WITH WASHER	1					
14	B4G–F5872–00	MANGUERA DE FRENO 1 HOSE, BRAKE 1	1					
15	90401–10826	PERNO DE UNION BOLT, UNION	1					
16	90201–10118	ARANDELA PLANA WASHER, PLATE	2					
17	90401–10827	PERNO DE UNION BOLT, UNION	1					
18	90201–10118	ARANDELA PLANA WASHER, PLATE	2					
19	B4G–F587A–00	SOPORTE DE MANGUERA FRENO HOLDER, BRAKE HOSE 4	1					
20	B4G–F6131–00	GUIA DE CABLE 1 GUIDE, CABLE 1	1					
21	95812–06012	TORNILLO DE REBORDE BOLT, FLANGE	1					
22	B4G–F5874–00	MANGUERA DE FRENO HOSE, BRAKE 3	1					
23	90401–10826	PERNO DE UNION BOLT, UNION	1					
24	90201–10118	ARANDELA PLANA WASHER, PLATE	2					
25	90401–10827	PERNO DE UNION BOLT, UNION	1					
26	90201–10118	ARANDELA PLANA WASHER, PLATE	2					
27	95022–06025	PERNO, DE BRIDA BOLT, FLANGE	1					

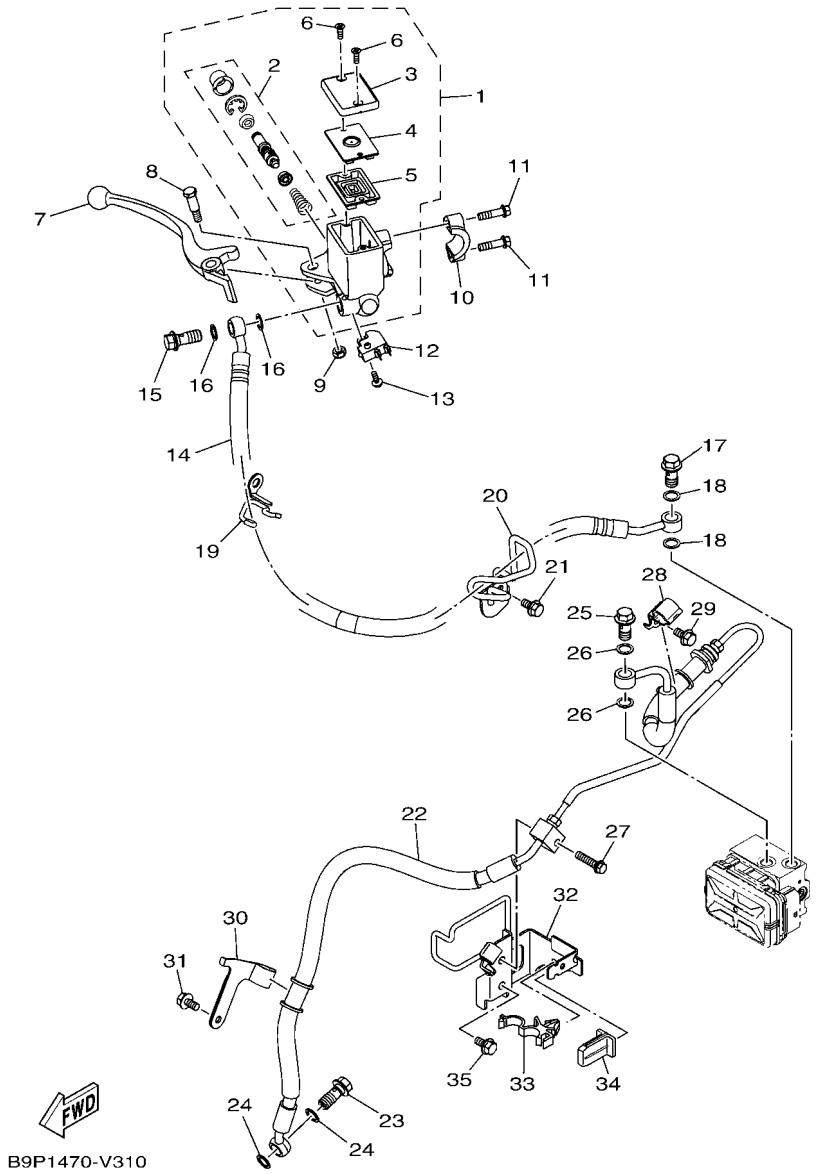

FIG. 29 CILINDRO MAESTRO DELANTERO — FRONT MASTER CYLINDER

REF. Nº	CODIGO Nº PART NO.	DESCRIPCION DESCRIPTION	BGB1					OBSERVACIONES REMARKS
28	B4G–F5875–00	SOPORTE DE MANGUERA FRENO 1 HOLDER, BRAKE HOSE 1	1					
29	95812–06012	TORNILLO DE REBORDE BOLT, FLANGE	1					
30	B4G–F5876–00	SOPORTE DE MANGUERA FRENO 2 HOLDER, BRAKE HOSE 2	1					
31	95812–06012	TORNILLO DE REBORDE BOLT, FLANGE	1					
32	B9P–F5887–00	SOPORTE DE MANGUERA FRENO HOLDER, BRAKE HOSE 3	1					
33	90464–16006	BRIDA CLAMP	1					
34	45S–F1778–00	AMORTIGUADOR DE MONTAJE DAMPER, LOCATING 1	1					
35	95812–06012	TORNILLO DE REBORDE BOLT, FLANGE	1					

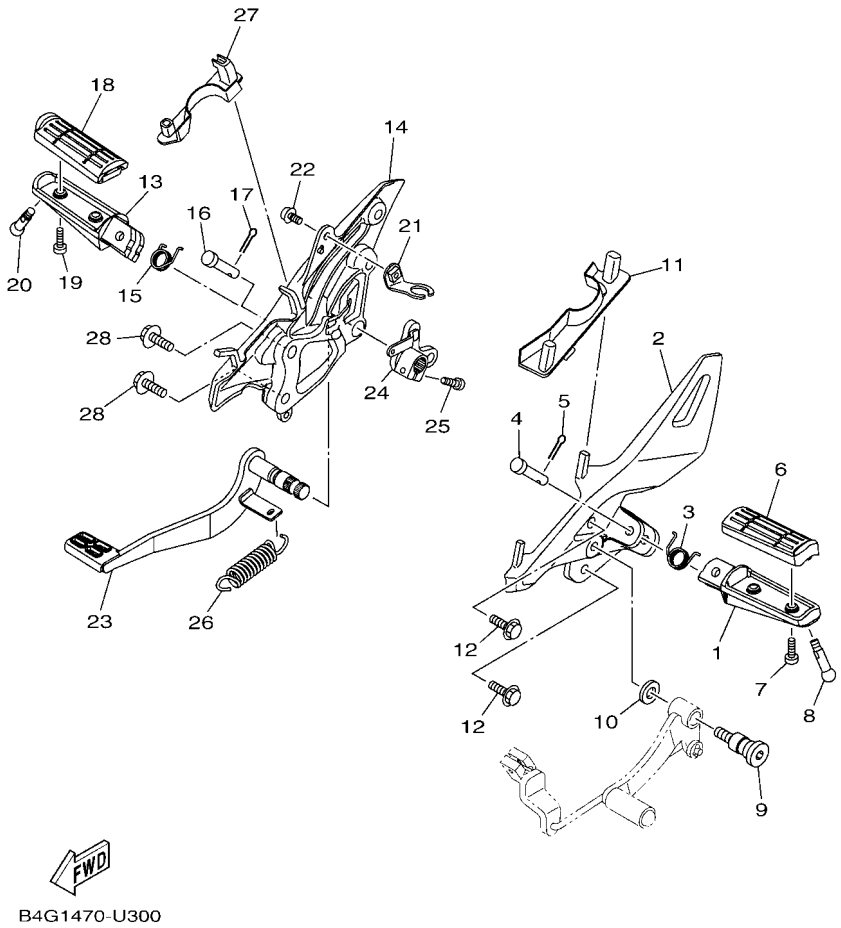

FIG. 30 SOPORTE & APOYAPIE — STAND & FOOTREST

REF. Nº	CODIGO Nº PART NO.	DESCRIPCION DESCRIPTION	BGB1					OBSERVACIONES REMARKS
1	35B–F7451–00	APOYAPIE FOOTREST 3	1					
2	B4G–F7452–00	SOPORTE, DE APOYAPIE 1 BRACKET, FOOTREST 1	1					
3	90508–183B9	RESORTE DE TORSION SPRING, TORSION	1					
4	91701–08040	PASADOR DE ABRAZADERA PIN	1					
5	90252–22800	PASADOR DE CHAVETA PIN, SPLIT	1					
6	21C–F7413–01	CUBIERTA DE APOYAPIE COVER, FOOTREST	1					
7	98502–05014	TORNILLO SCREW, PAN HEAD	2					
8	90109–08202	PERNO BOLT	1					
9	21C–F7261–00	EJE SHAFT	1					
10	90201–10841	ARANDELA PLANA WASHER, PLATE	1					
11	B4G–F7414–00	AMORTIGUADOR DE APOYAPIE DAMPER, FOOTREST	1					
12	95812–08025	TORNILLO DE REBORDE BOLT, FLANGE	2					
13	35B–F7461–00	APOYAPIE FOOTREST 4	1					
14	B4G–F7462–00	SOPORTE, DE APOYAPIE 2 BRACKET, FOOTREST 2	1					
15	90508–183B9	RESORTE DE TORSION SPRING, TORSION	1					
16	91701–08040	PASADOR DE ABRAZADERA PIN	1					
17	90252–22800	PASADOR DE CHAVETA PIN, SPLIT	1					
18	21C–F7413–01	CUBIERTA DE APOYAPIE COVER, FOOTREST	1					
19	98502–05014	TORNILLO SCREW, PAN HEAD	2					
20	90109–08202	PERNO BOLT	1					
21	2GS–F144G–10	SOPORTE DE INTERRUPTOR STAY, STOP SWITCH	1					
22	95802–06012	TORNILLO DE REBORDE BOLT, FLANGE	1					
23	B97–F7211–00	PEDAL DE FRENO PEDAL, BRAKE	1					
24	2GS–F7262–00	PALANCA LEVER	1					
25	91312–06020	TORNILLO ALLEN BOLT, HEXAGON SOCKET HEAD	1					
26	90506–29807	RESORTE DE TENSION SPRING, TENSION	1					
27	B4G–F7424–00	AMORTIGUADOR DE APOYAPIE 2 DAMPER, FOOTREST 2	1					

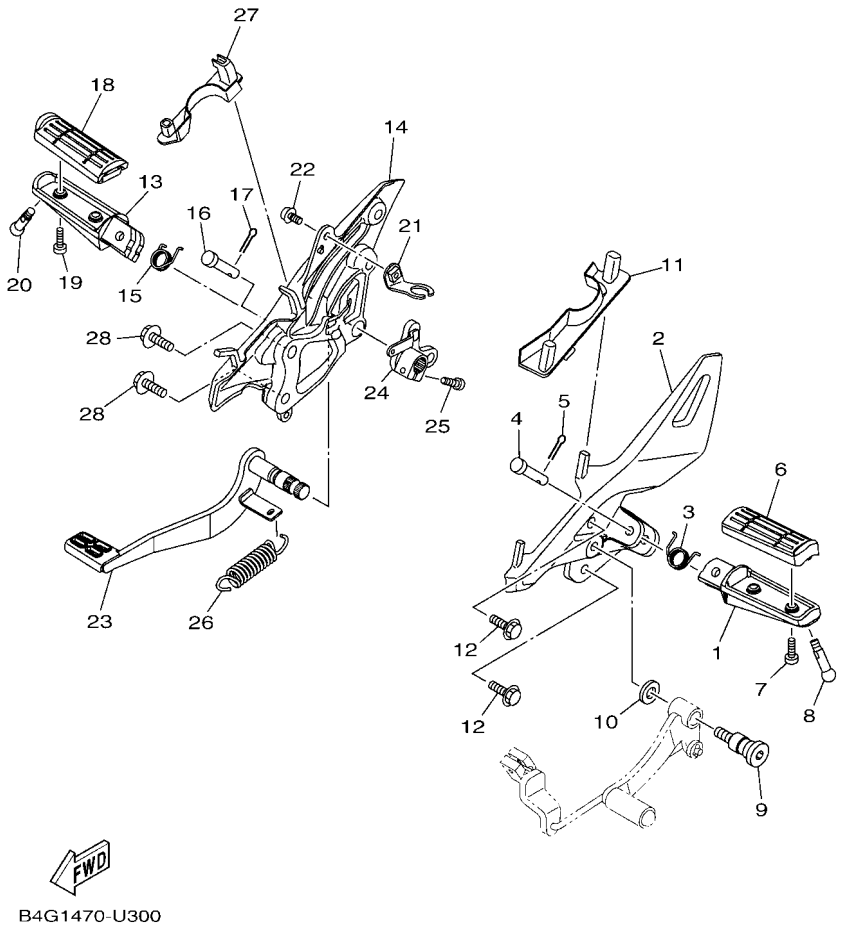

FIG. 30 SOPORTE & APOYAPIE — STAND & FOOTREST

REF. Nº	CODIGO Nº PART NO.	DESCRIPCION DESCRIPTION	BGB1					OBSERVACIONES REMARKS
28	95812–08025	TORNILLO DE REBORDE BOLT, FLANGE	2					

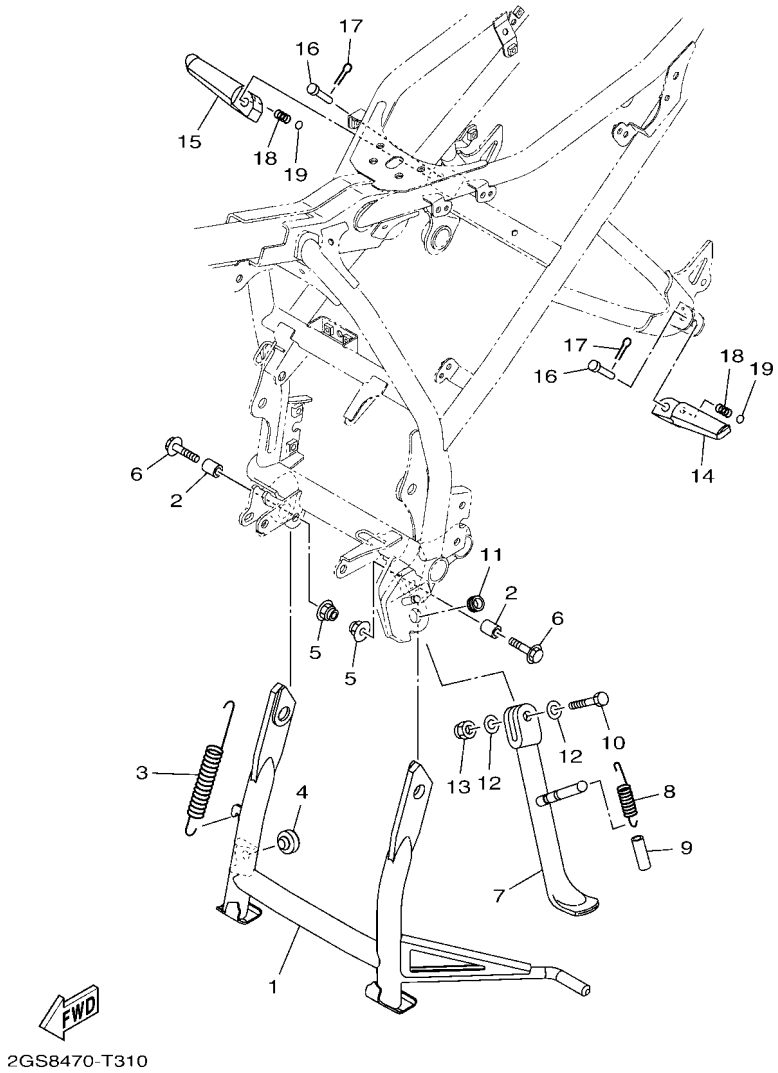

FIG. 31 SOPORTE & APOYAPIE 2 — STAND & FOOTREST 2

REF. Nº	CODIGO Nº PART NO.	DESCRIPCION DESCRIPTION	BGB1					OBSERVACIONES REMARKS
1	45S–F7111–00	PUNTAL PRINCIPAL STAND, MAIN	1					
2	90387–10822	ESPACIADOR COLLAR	2					
3	90506–35816	RESORTE DE TENSION SPRING, TENSION	1					
4	21C–F7114–00	TOPE DE PUNTAL PRINCIPAL STOPPER, MAIN STAND	1					
5	95602–10200	TUERCA DE AUTO-CIERRE NUT, S/L FLANGE	2					
6	95812–10035	TORNILLO DE REBORDE BOLT, FLANGE	2					
7	21C–F7311–10	PUNTAL LATERAL STAND, SIDE	1					
8	90506–23807	RESORTE DE TENSION SPRING, TENSION	1					
9	90445–13806	TUBO HOSE	1					
10	90101–10812	TORNILLO BOLT	1					
11	90387–10003	ESPACIADOR COLLAR	1					
12	90201–10841	ARANDELA PLANA WASHER, PLATE	2					
13	90185–10804	TUERCA AUTOBLOCANTE NUT, SELF-LOCKING	1					
14	20P–F7431–00	APOYAPIE POSTERIOR 1 FOOTREST, REAR 1	1					
15	20P–F7441–00	APOYAPIE POSTERIOR 2 FOOTREST, REAR 2	1					
16	91701–08035	PASADOR DE ABRAZADERA PIN	2					
17	90252–22800	PASADOR DE CHAVETA PIN, SPLIT	2					
18	90501–12743	RESORTE DE COMPRESION SPRING, COMPRESSION	2					
19	93501–04805	BOLA BALL	2					

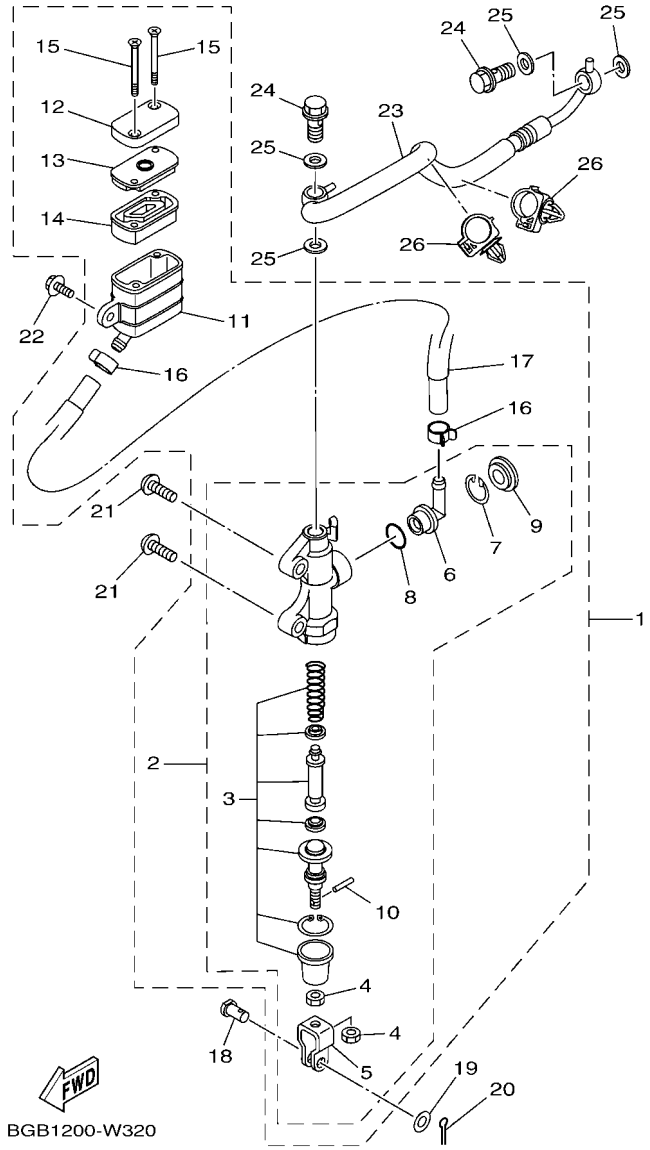

FIG. 32 CILINDRO MAESTRO TRASERO — REAR MASTER CYLINDER

REF. Nº	CODIGO Nº PART NO.	DESCRIPCION DESCRIPTION	BGB1					OBSERVACIONES REMARKS
1	B97–F580E–00	CYLINDRO MAESTRO TRASERO COMP REAR MASTER CYLINDER ASSY	1					
2	B97–F583V–00	.CILINDRO, MAESTRO TRASERO .RR. MASTER CYLINDER ASSY.	1					
3	B97–F5808–00	..JUEGO DE CILINDRO MAESTRO ..CYLINDER KIT, MASTER	1					
4	95302–08700	..TUERCA ..NUT, HEXAGON	2					
5	2YK–F7222–00	..UNION ..JOINT	1					
6	4ML–F582A–50	..CONECTOR ..JOINT	1					
7	2VN–F5866–00	..PRESILLA REDONDA ..CIRCLIP	1					
8	93210–15620	..ANILLO O ..O-RING	1					
9	3FV–F589A–00	..CUBIERTA PARA POLVO ..COVER, DUST	1					
10	4TT–F7238–00	..PASADOR ..PIN	1					
11	20P–F5894–00	.TANQUE DE RESERVA .TANK, RESERVOIR	1					
12	54C–F5852–00	.TAPA DE TANQUE DE RESERVA .CAP, RESERVOIR	1					
13	20P–F585B–00	.PLACA, DIAFRAGMA .PLATE, DIAPHRAGM	1					
14	20P–F5854–00	.EMPAQUE,DIAFRAGMA .DIAPHRAGM, RESERVOIR	1					
15	98707–04045	.TORNILLO DE CABEZA PLANA .SCREW, FLAT HEAD	2					
16	90467–12085	.PRESILLA .CLIP	2					
17	20P–F5895–00	.MANGUERA DE TANQUE DE RESERVA .HOSE, RESERVOIR	1					
18	90240–08005	PASADOR CON HOYO PIN, CLEVIS	1					
19	90201–08066	ARANDELA PLANA WASHER, PLATE	1					
20	90252–18800	PASADOR DE CHAVETA PIN, COTTER	1					
21	92012–08020	PERNO BOLT, BUTTON HEAD	2					
22	90159–06844	TORNILLO CON VALONA SCREW, WITH WASHER	1					
23	B4G–F5873–00	MANGUERA DE FRENO 2 HOSE, BRAKE 2	1					
24	90401–10824	PERNO DE UNION BOLT, UNION	2					
25	90201–10844	ARANDELA PLANA WASHER, PLATE	4					
26	90464–17003	BRIDA CLAMP	2					

FIG. 33 PATA PROTEGIDA — LEG SHIELD

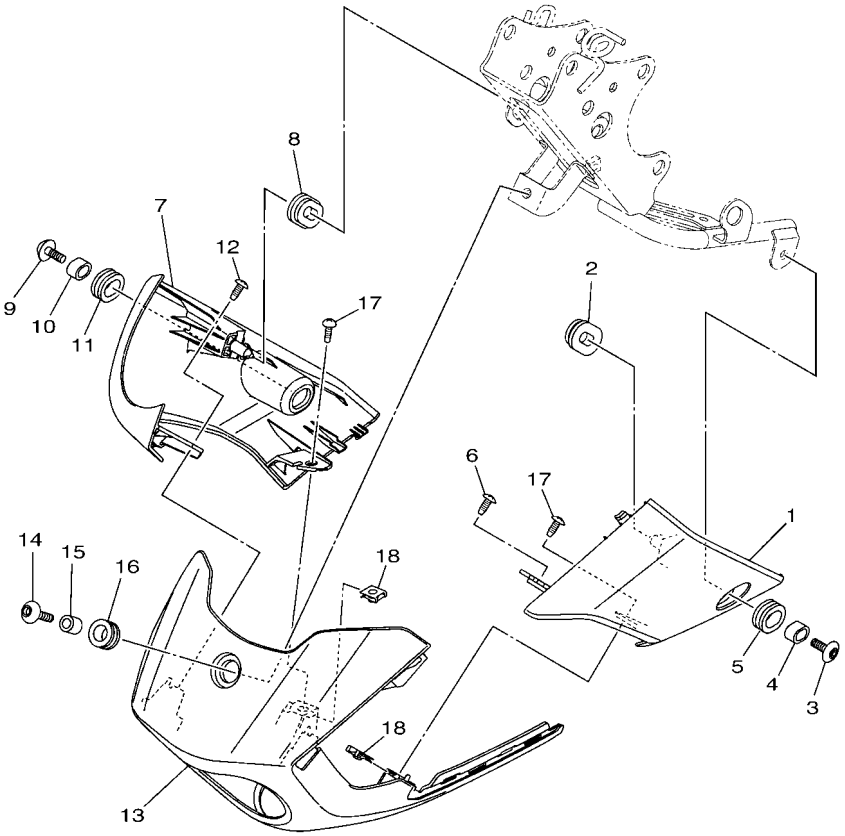

B9P1470-V350

REF. Nº	CODIGO Nº PART NO.	DESCRIPCION DESCRIPTION	BGB1					OBSERVACIONES REMARKS
1	B9P–F8385–00–P0	CUBIERTA INFERIOR COVER, UNDER	1					MBL2 MBL2
2	90480–01558	TAPON GROMMET	1					
3	90149–06829	TORNILLO DE REGLAJE SCREW	1					
4	20P–F1749–00	COLLAR COLLAR	1					
5	90480–01811	TAPON GROMMET	1					
6	97702–50016	TORNILLO ROSCA HEMBRA SCREW,TAPPING	1					
7	B9P–F8395–00–P0	CUBIERTA INFERIOR 2 COVER, UNDER 2	1					MBL2 MBL2
8	90480–01558	TAPON GROMMET	1					
9	90149–06829	TORNILLO DE REGLAJE SCREW	1					
10	20P–F1749–00	COLLAR COLLAR	1					
11	90480–01811	TAPON GROMMET	1					
12	97702–50016	TORNILLO ROSCA HEMBRA SCREW,TAPPING	1					
13	B9P–F837D–00	CUBIERTA INFERIOR 3 COVER, UNDER 3	1					
14	90149–06829	TORNILLO DE REGLAJE SCREW	1					
15	90387–068C2	ESPACIADOR COLLAR	1					
16	90480–14003	TAPON GROMMET	1					
17	97702–50016	TORNILLO ROSCA HEMBRA SCREW,TAPPING	2					
18	90183–05807	TUERCA DE RESORTE NUT, SPRING	2					

FIG. 34 GENERADOR — GENERATOR

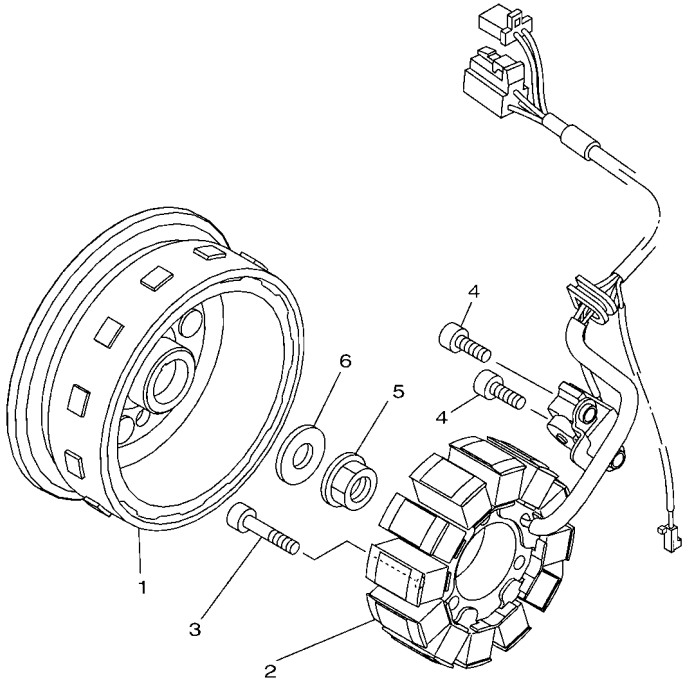

2GS1470-P310

REF. Nº	CODIGO Nº PART NO.	DESCRIPCION DESCRIPTION	BGB1					OBSERVACIONES REMARKS
1	2GS–H1450–00	ROTOR COMPLETO ROTOR ASSY	1					
2	2GS–H1410–00	ESTATOR COMPLETO STATOR ASSY	1					
3	91312–06030	TORNILLO ALLEN BOLT, HEXAGON SOCKET HEAD	3					
4	91312–06014	TORNILLO ALLEN BOLT, HEXAGON SOCKET HEAD	2					
5	95707–12500	TUERCA DE BRIDA NUT, FLANGE	1					
6	90201–12836	ARANDELA PLANA WASHER, PLATE	1					

FIG. 35 MOTOR DE ARRANQUE — STARTING MOTOR

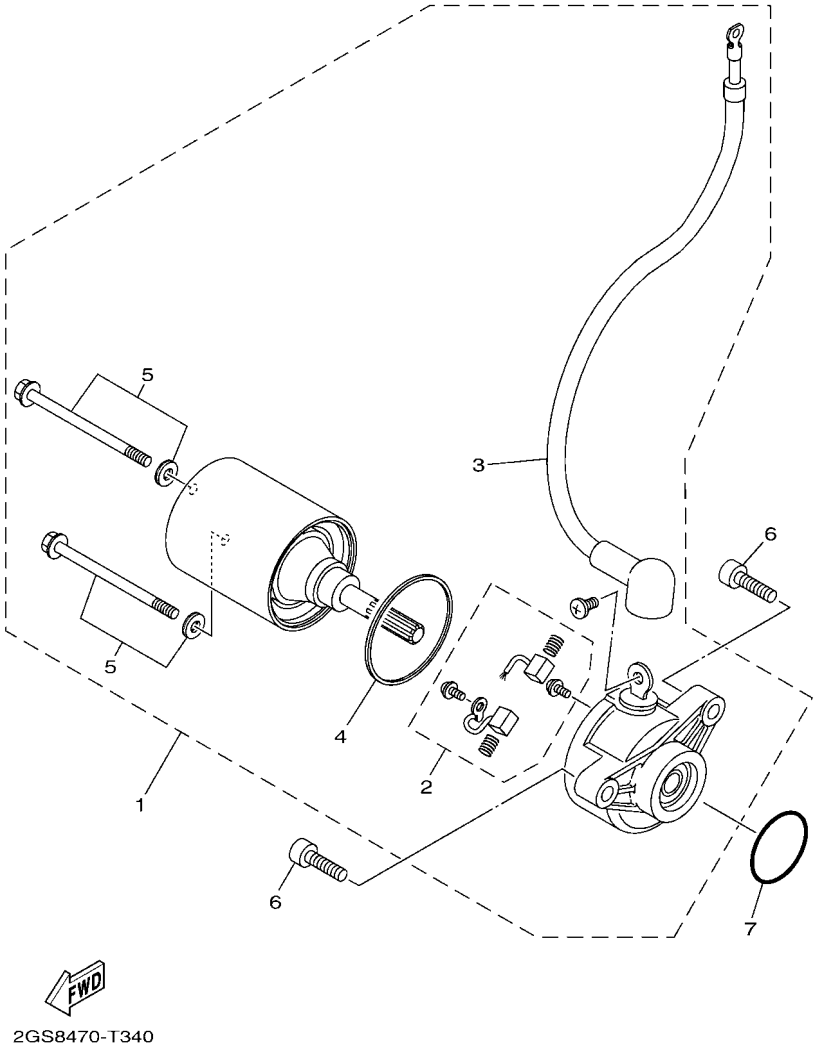

REF. Nº	CODIGO Nº PART NO.	DESCRIPCION DESCRIPTION	BGB1					OBSERVACIONES REMARKS
1	2GS–H1800–10	MOTOR DE ARRANQUE COMPLETO STARTING MOTOR ASSY	1					
2	2SP–H1801–10	.JUEGO DE ESCOBILLA .BRUSH SET	1					
3	2GS–H183G–00	.CABLE DEL MOTOR COMPL. .CORD COMP.	1					
4	2SP–H1834–10	.ANILLO .O-RING	1					
5	2SP–H1828–10	.TORNILLO DE EMPUJE 2 .SCREW SET	2					
6	91312–06020	TORNILLO ALLEN BOLT, HEXAGON SOCKET HEAD	2					
7	93210–29807	ANILLO O O-RING	1					

FIG. 36 LUZ DE DESTELLADOR — FLASHER LIGHT

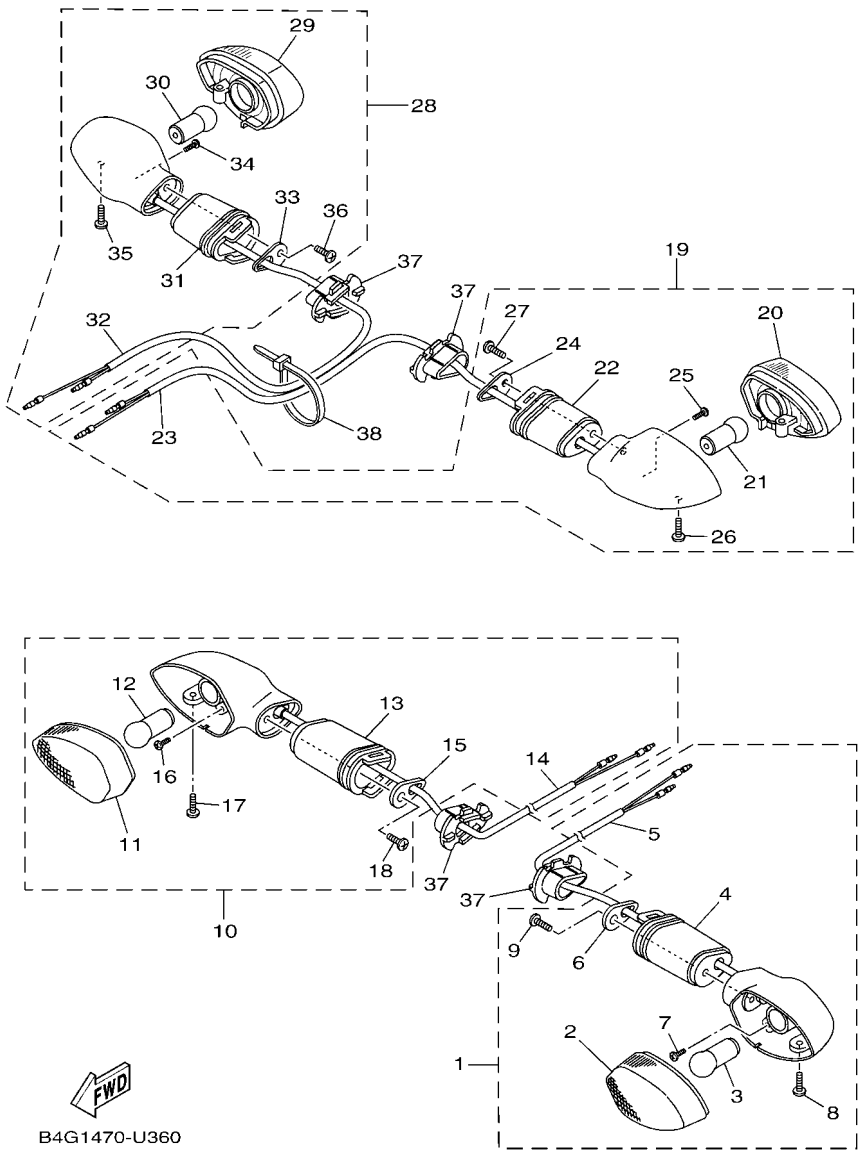

REF. Nº	CODIGO Nº PART NO.	DESCRIPCION DESCRIPTION	BGB1					OBSERVACIONES REMARKS
1	B4G–H3310–00	DESTELLADOR DE LUZ DELANT. FRONT FLASHER LIGHT ASSY 1	1					
2	B1P–H333A–00	.LENTES COMPLETO 1 .LENS COMP 1	1					
3	2FB–H3311–00	.BOMBILLA (12V-10W) .BULB, FLASHER (12V-10W)	1					
4	BR2–H3318–00	.SOPORTE DE DESTELLADOR 1 .STAY, FLASHER 1	1					
5	BR2–H331E–00	.CORDON COMPLETO .CORD ASSY	1					
6	20P–H3618–00	.PLACA .PLATE	1					
7	20P–H213A–00	.TORNILLO ACCESORIO .SCREW, FITTING	1					
8	20P–H3333–00	.TORNILLO ACCESORIO DE LENTE .SCREW, LENS FITTING	1					
9	20P–H2133–00	.TORNILLO ACCESORIO .SCREW, FITTING	1					
10	B4G–H3320–00	DESTELLADOR DE LUZ DELANT. FRONT FLASHER LIGHT ASSY 2	1					
11	B1P–H334A–00	.LENTES COMPLETO 2 .LENS COMP 2	1					
12	2FB–H3311–00	.BOMBILLA (12V-10W) .BULB, FLASHER (12V-10W)	1					
13	BR2–H3318–00	.SOPORTE DE DESTELLADOR 1 .STAY, FLASHER 1	1					
14	BR2–H332E–00	.CABLE COMPL. .CORD ASSY	1					
15	20P–H3618–00	.PLACA .PLATE	1					
16	20P–H213A–00	.TORNILLO ACCESORIO .SCREW, FITTING	1					
17	20P–H3333–00	.TORNILLO ACCESORIO DE LENTE .SCREW, LENS FITTING	1					
18	20P–H2133–00	.TORNILLO ACCESORIO .SCREW, FITTING	1					
19	B4G–H3330–00	DESTELLADOR DE LUZ TRAS.COMPL. REAR FLASHER LIGHT ASSY 1	1					
20	B1P–H334A–00	.LENTES COMPLETO 2 .LENS COMP 2	1					
21	2FB–H3311–00	.BOMBILLA (12V-10W) .BULB, FLASHER (12V-10W)	1					
22	20P–H3318–00	.SOPORTE DE DESTELLADOR 1 .STAY, FLASHER 1	1					
23	2GS–H333E–00	.CABLE COMPLETA .CORD ASSY	1					
24	20P–H3618–00	.PLACA .PLATE	1					
25	20P–H213A–00	.TORNILLO ACCESORIO .SCREW, FITTING	1					
26	20P–H3333–00	.TORNILLO ACCESORIO DE LENTE .SCREW, LENS FITTING	1					
27	20P–H2133–00	.TORNILLO ACCESORIO .SCREW, FITTING	1					

FIG. 36 LUZ DE DESTELLADOR — FLASHER LIGHT

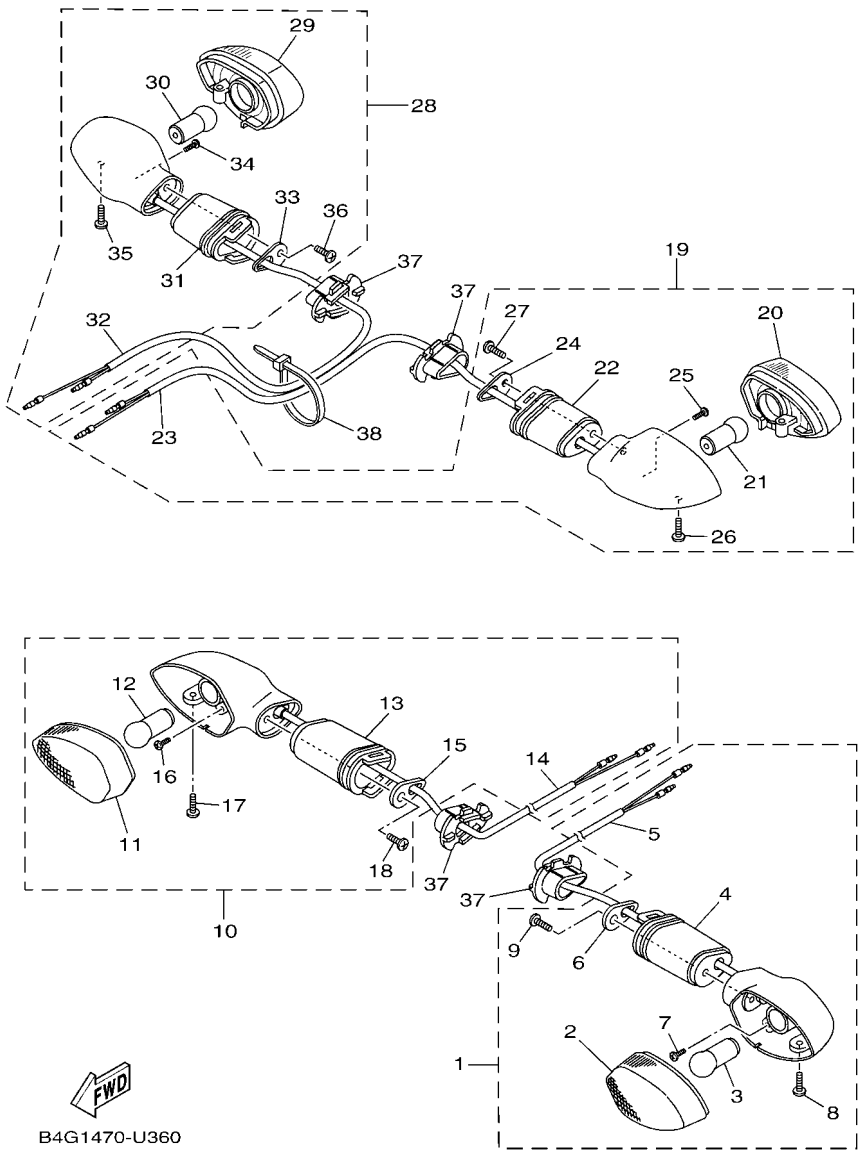

REF. Nº	CODIGO Nº PART NO.	DESCRIPCION DESCRIPTION	BGB1					OBSERVACIONES REMARKS
28	B4G–H3340–00	DESTELLADOR DE LUZ TRAS.COMPL. REAR FLASHER LIGHT ASSY 2	1					
29	B1P–H333A–00	.LENTES COMPLETO 1 .LENS COMP 1	1					
30	2FB–H3311–00	.BOMBILLA (12V-10W) .BULB, FLASHER (12V-10W)	1					
31	20P–H3318–00	.SOPORTE DE DESTELLADOR 1 .STAY, FLASHER 1	1					
32	2GS–H334E–00	.CABLE COMPLETA .CORD ASSY	1					
33	20P–H3618–00	.PLACA .PLATE	1					
34	20P–H213A–00	.TORNILLO ACCESORIO .SCREW, FITTING	1					
35	20P–H3333–00	.TORNILLO ACCESORIO DE LENTE .SCREW, LENS FITTING	1					
36	20P–H2133–00	.TORNILLO ACCESORIO .SCREW, FITTING	1					
37	5YY–H3318–10	SOPORTE DE DESTELLADOR 1 STAY, FLASHER 1	4					
38	90464–16061	BRIDA CLAMP	1					

FIG. 37 MEDIDOR METER

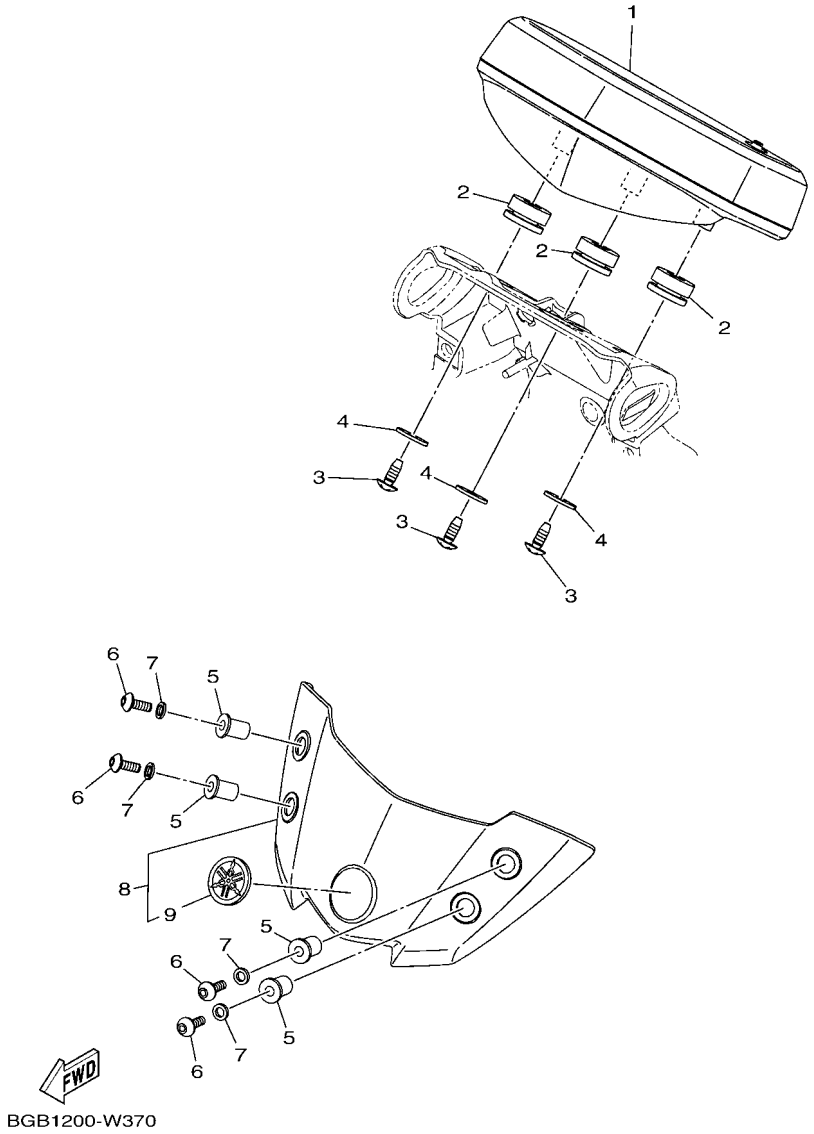

REF. Nº	CODIGO Nº PART NO.	DESCRIPCION DESCRIPTION	BGB1					OBSERVACIONES REMARKS
1	B4G–H3500–11	METRO COMPLETO METER ASSY	1					UR UR
	B8T–H3500–11	METRO COMPLETO METER ASSY	1					UR UR
2	90480–14818	TAPON GROMMET	3					
3	97702–50014	TORNILLO ROSCA HEMBRA SCREW, TAPPING	3					
4	90201–05036	ARANDELA PLANA WASHER, PLATE	3					
5	90179–05804	TUERCA NUT	4					
6	90111–05034	TORNILLO BOLT,HEX. SOCKET BUTTON	4					
7	92902–05200	ARANDELA WASHER	4					
8	B4G–XH355–00	CUBIERTA DE MEDIDOR COVER, METER	1					
9	B4G–F836B–00	.MARCA .TUNING FORK MARK	1					

FIG. 38 FARO DELANTERO HEADLIGHT

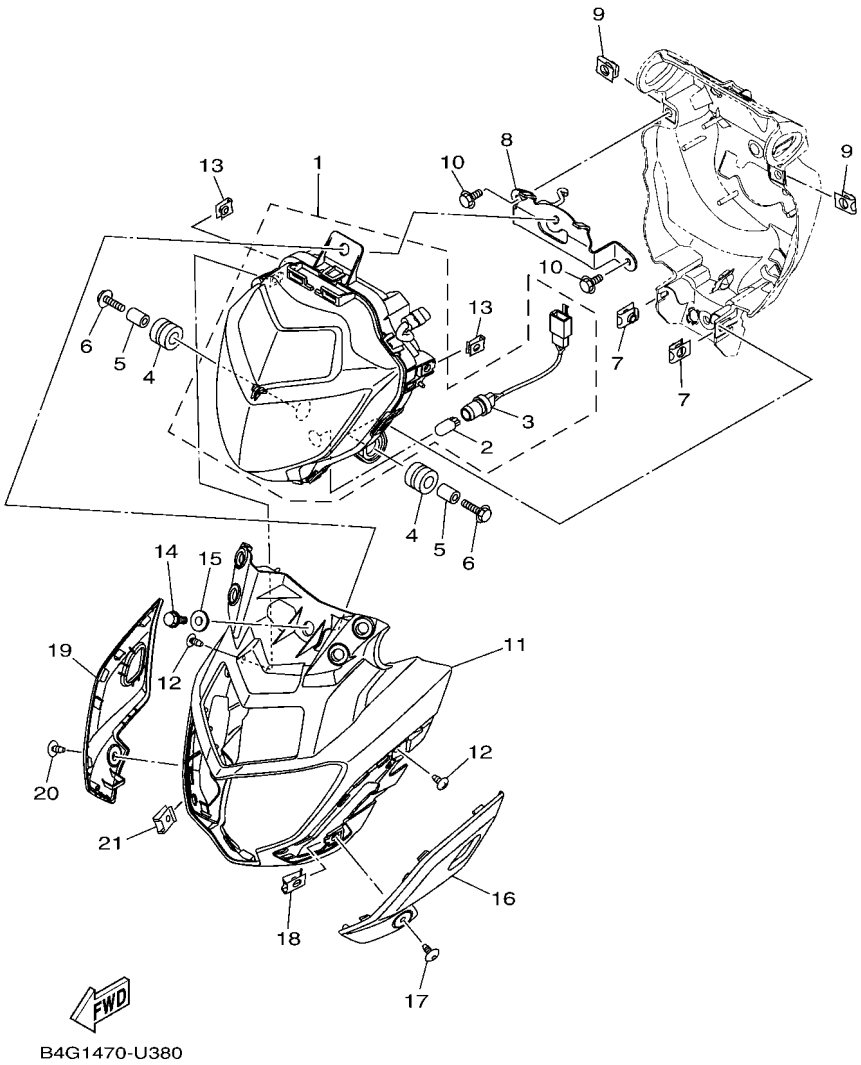

REF. Nº	CODIGO Nº PART NO.	DESCRIPCION DESCRIPTION	BGB1					OBSERVACIONES REMARKS
1	B4G–H4300–00	FARO DELANTERO COMPLETO HEADLIGHT ASSY	1					
2	2LP–H4347–00	.AMPOLLETA (12V-5W) .BULB (12V-5W)	1					
3	B4G–H4312–00	.CABLE COMPLETA .CORD ASSY	1					
4	90480–14101	TAPON GROMMET	2					
5	90387–068D4	ESPACIADOR COLLAR	2					
6	95827–06025	TORNILLO BOLT, FLANGE	2					
7	90183–06800	TUERCA DE RESORTE NUT, SPRING	2					
8	B4G–F3175–00	APOYO SOPORTE FARO DELANT.1 BRACKET, HEADLIGHT STAY 1	1					
9	90183–06800	TUERCA DE RESORTE NUT, SPRING	2					
10	95822–06016	TORNILLO DE REBORDE BOLT, FLANGE	2					
11	B4G–F3121–00	CUBIERTA SUPERIOR 1 COVER, UPPER 1	1					
12	97702–50012	TORNILLO ROSCA HEMBRA SCREW, TAPPING	2					
13	90183–05807	TUERCA DE RESORTE NUT, SPRING	2					
14	95822–06016	TORNILLO DE REBORDE BOLT, FLANGE	1					
15	90387–068N2	ESPACIADOR COLLAR	1					
16	B4G–F3122–00–P2	CUBIERTA EXTERIOR 1 COVER, OUTER 1	1					UR PARA MBL2 UR FOR MBL2
	B4G–F3122–00–P3	CUBIERTA EXTERIOR 1 COVER, OUTER 1	1					UR CM6 PARA MNM3 UR CM6 FOR MNM3
	B4G–F3122–00–P4	CUBIERTA EXTERIOR 1 COVER, OUTER 1	1					UR PARA MDPBM1 UR FOR MDPBM1
	B4G–F3122–00–P5	CUBIERTA EXTERIOR 1 COVER, OUTER 1	1					UR PARA VRC1 UR FOR VRC1
17	90160–05812	TORNILLO REDONDO ROSCA HEMBRA SCREW, ROUND TAPPING	1					
18	90183–05807	TUERCA DE RESORTE NUT, SPRING	1					
19	B4G–F3132–00–P2	CUBIERTA EXTERIOR 2 COVER, OUTER 2	1					UR PARA MBL2 UR FOR MBL2
	B4G–F3132–00–P3	CUBIERTA EXTERIOR 2 COVER, OUTER 2	1					UR CM6 PARA MNM3 UR CM6 FOR MNM3
	B4G–F3132–00–P4	CUBIERTA EXTERIOR 2 COVER, OUTER 2	1					UR PARA MDPBM1 UR FOR MDPBM1
	B4G–F3132–00–P5	CUBIERTA EXTERIOR 2 COVER, OUTER 2	1					UR PARA VRC1 UR FOR VRC1
20	90160–05812	TORNILLO REDONDO ROSCA HEMBRA SCREW, ROUND TAPPING	1					
21	90183–05807	TUERCA DE RESORTE NUT, SPRING	1					

FIG. 39 LUZ DE COLA — TAILLIGHT

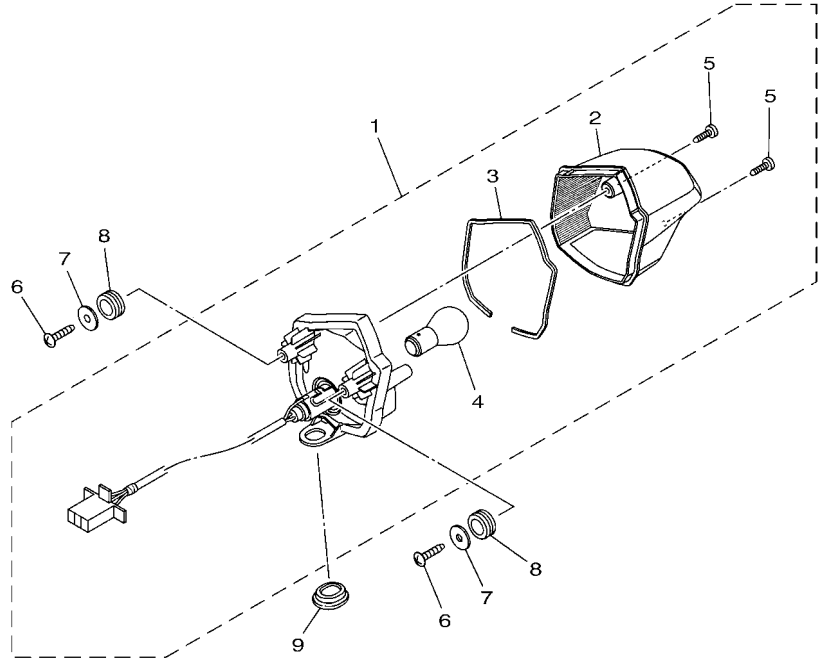

B4G1470-U390

REF. Nº	CODIGO Nº PART NO.	DESCRIPCION DESCRIPTION	BGB1					OBSERVACIONES REMARKS
1	B4G–H4710–00	UNIDAD FARO TRASERO COMPL. TAILLIGHT UNIT ASSY	1					
2	B4G–H4721–00	.LENTE DE FARO TRASERO .LENS, TAILLIGHT	1					
3	2GS–H4723–00	.EMPAQUE LENTE FARO TRASERO .GASKET, TAIL LENS	1					
4	1GC–H4714–00	.BOMBILLA (12V-21/5W) .BULB (12V-21/5W)	1					
5	97702–40512	.TORNILLO ROSCA HEMBRA .SCREW, TAPPING	2					
6	97702–50016	TORNILLO ROSCA HEMBRA SCREW,TAPPING	2					
7	90201–05036	ARANDELA PLANA WASHER, PLATE	2					
8	90480–14819	TAPON GROMMET	2					
9	90480–01558	TAPON GROMMET	1					

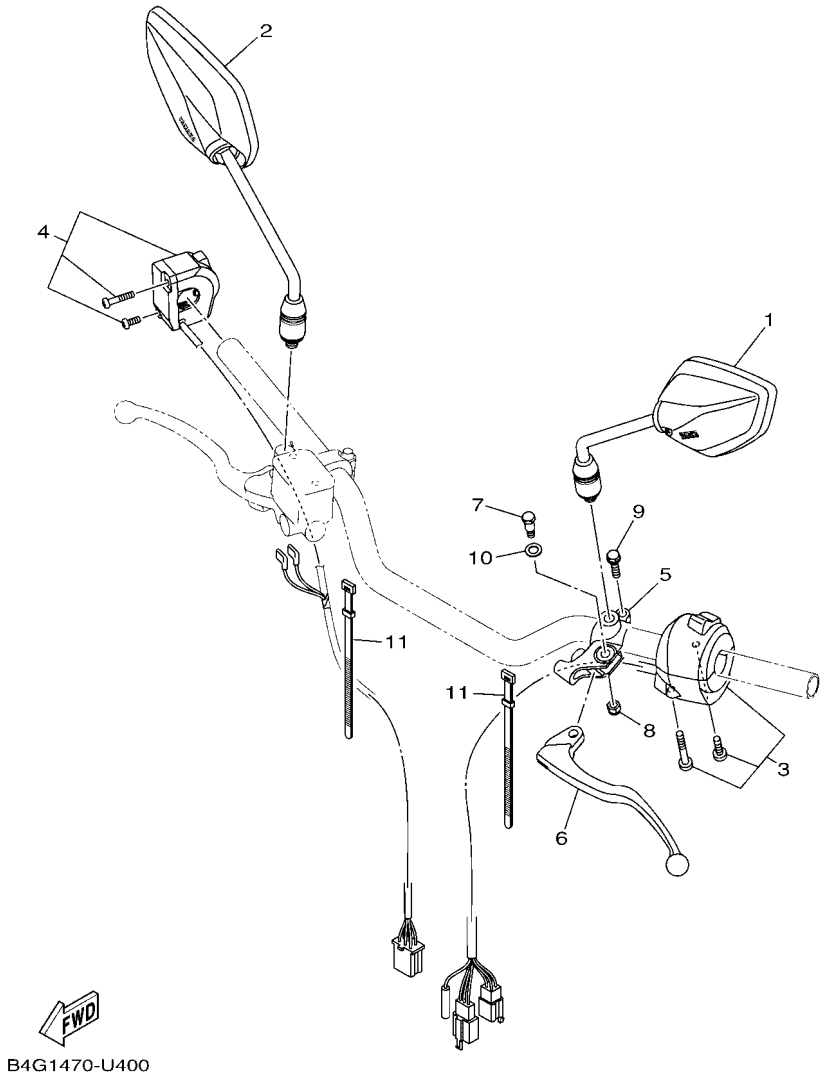

FIG. 40 INTERRUPTOR DE MANILLAR&PALANC HANDLE SWITCH & LEVER

REF. Nº	CODIGO Nº PART NO.	DESCRIPCION DESCRIPTION	BGB1					OBSERVACIONES REMARKS
1	B97–F6280–00	ESPEJO COMPLETO (IZQUIERDO) REAR VIEW MIRROR ASSY (LEFT)	1					
2	B97–F6290–00	ESPEJO COMPLETO (DERECHO) REAR VIEW MIRROR ASSY (RIGHT)	1					
3	B97–H3972–00	INTERRUPTOR DE MANIJA 4 SWITCH, HANDLE 4	1					
4	B4G–H3975–00	INTERRUPTOR DE MANIJA 2 SWITCH, HANDLE 2	1					
5	5YY–H2911–02	SOPORTE DE LEVA 1 HOLDER, LEVER 1	1					
6	21C–H3912–01	PALANCA 1 LEVER 1	1					
7	36L–H3945–10	PERNO DE PALANCA BOLT, LEVER	1					
8	95707–06300	TUERCA DE BRIDA NUT, NYLON	1					
9	9750M–06425	PERNO CON ARANDELA BOLT, WITH WASHER	1					
10	90201–08834	ARANDELA PLANA WASHER, PLATE	1					
11	36L–H3936–00	BANDA DE CABLE DE INTERRUPTOR BAND, SWITCH CORD	2					

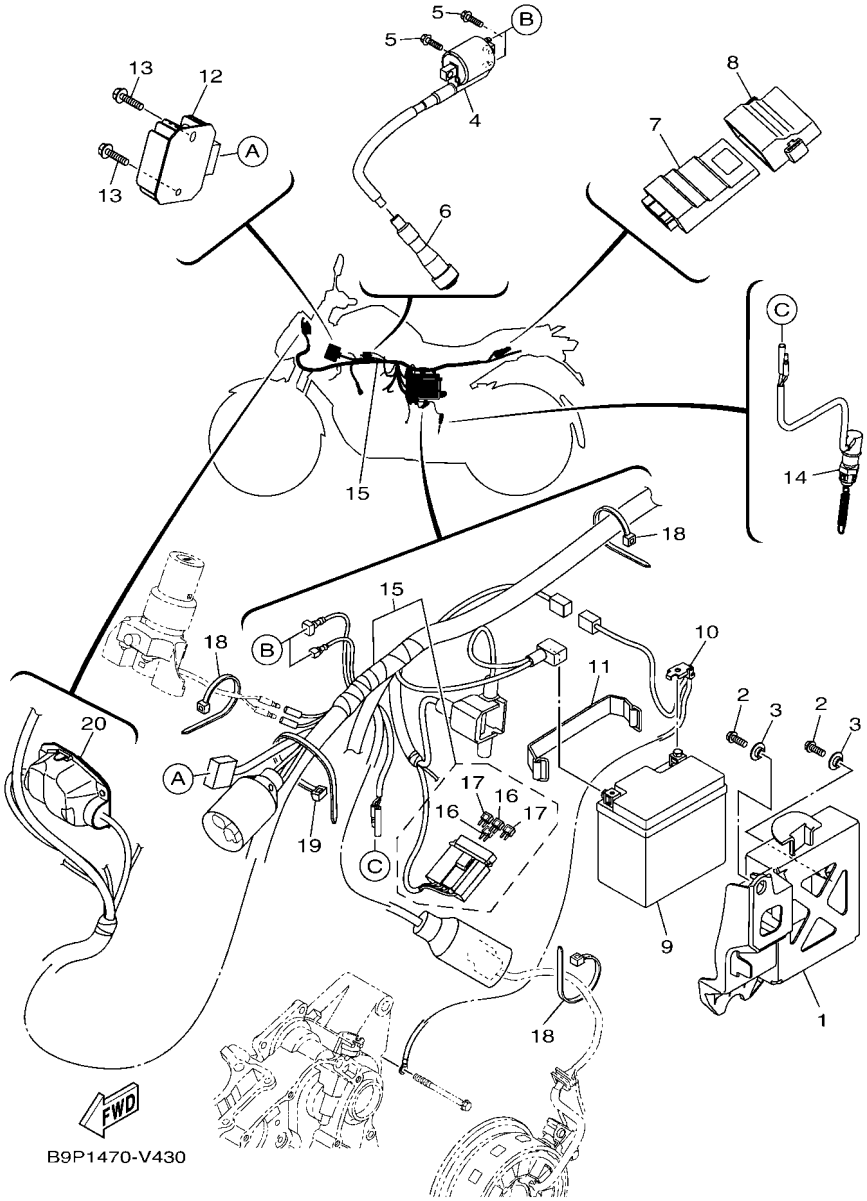

FIG. 41 EQUIPO ELECTRICO 1 — ELECTRICAL 1

REF. Nº	CODIGO Nº PART NO.	DESCRIPCION DESCRIPTION	BGB1					OBSERVACIONES REMARKS
1	B4G–F177G–00	CAJA DE BATERIA BOX, BATTERY	1					
2	95022–06016	PERNO, DE BRIDA BOLT, FLANGE	2					
3	90387–068S1	ESPACIADOR COLLAR	2					
4	B9P–H2310–00	BOBINA DE ENCENDIDO COMPLETA IGNITION COIL ASSY	1					
5	97502–05520	PERNO CON ARANDELA BOLT, WITH WASHER	2					
6	B4G–H2370–00	TAPON DE BUJIA COMPLT PLUG CAP ASSY	1					
7	B9P–H591A–00	UNIDAD CONTROL ENGINE CONTROL UNIT ASSY	1					
8	B9P–H5546–00	BANDA BAND	1					
9	B1P–H2100–00	BATERIA COMPLETA (YUASA YTZ6V) BATTERY ASSY (YUASA YTZ6V)	1					
10	B4G–H2116–00	CABLE CONDUCTOR NEGATIVO WIRE, MINUS LEAD	1					
11	5YY–H2131–10	TIRANTE DE BATERIA BAND, BATTERY	1					
12	2GS–H1960–10	RECTIFICADOR Y REGULADOR RECTIFIER & REGULATOR ASSY	1					
13	95802–06025	TORNILLO DE REBORDE BOLT, FLANGE	2					
14	B97–H2530–00	INTERRUPTOR DE PARADA COMPLETO STOP SWITCH ASSY	1					
15	B9P–H2590–00	CONJUNTO DE CABLES WIRE HARNESS ASSY	1					UR UR
	B9P–H2590–20	CONJUNTO DE CABLES WIRE HARNESS ASSY	1					UR UR
16	B4G–H2151–00	.FUSIBLE (7.5A) .FUSE (7.5A)	2					
17	B4G–H2151–30	.FUSIBLE (10A) .FUSE (10A)	2					
18	90464–16061	BRIDA CLAMP	3					
19	90464–50800	BRIDA CLAMP	1					
20	B4G–H2599–00	CUBIERTA DE CONECTOR COVER, CONNECTOR	1					

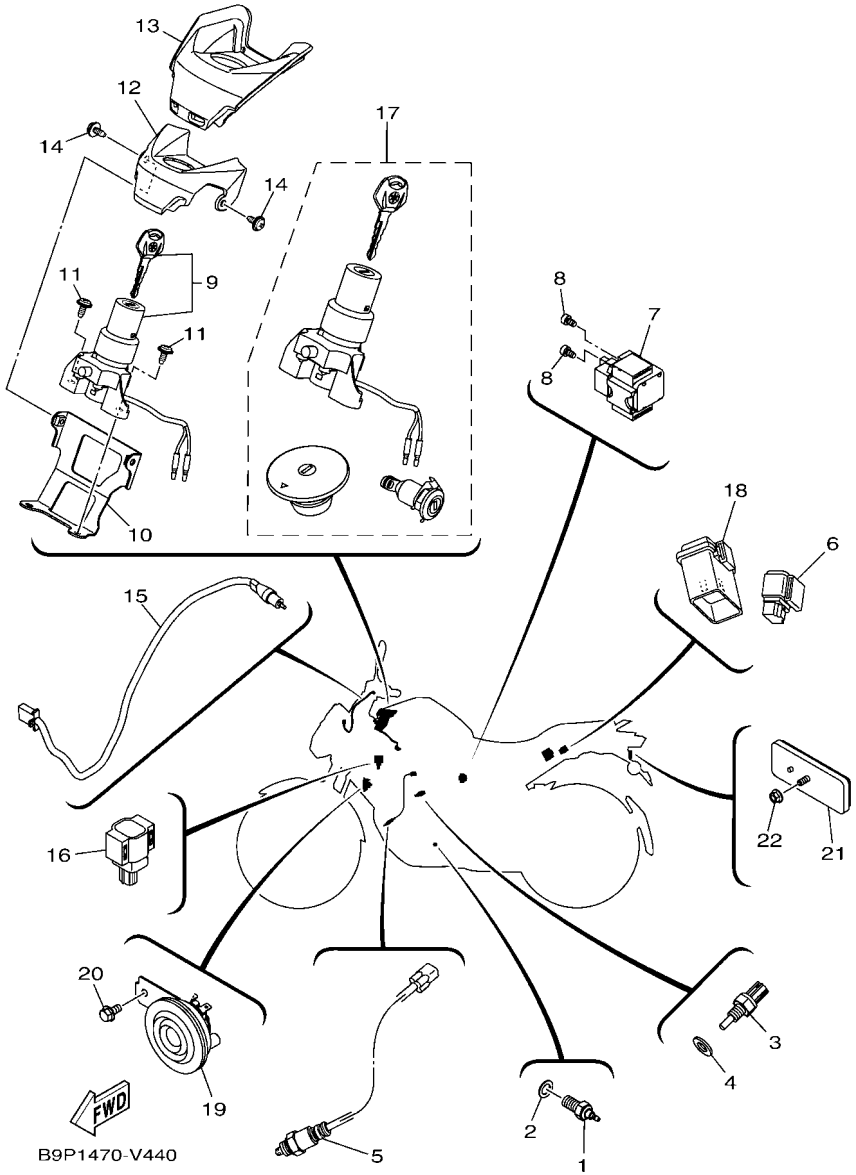

FIG. 42 EQUIPO ELECTRICO 2 — ELECTRICAL 2

REF. Nº	CODIGO Nº PART NO.	DESCRIPCION DESCRIPTION	BGB1					OBSERVACIONES REMARKS
1	21C–H2540–00	INTERRUPTOR NEUTRAL COMPL NEUTRAL SWITCH ASSY	1					
2	90430–10148	JUNTA GASKET	1					
3	B7J–H3591–00	UNIDAD TERMOSTATO THERMO UNIT	1					
4	90201–10128	ARANDELA PLANA WASHER, PLATE	1					
5	B9P–H592A–00	SENSOR SENSOR, OXYGEN	1					
6	B4G–H1950–00	RELE COMPLETO RELAY ASSY	1					
7	54B–H1940–01	CONJUNTO ARRANCADOR RELEVO STARTER RELAY ASSY	1					
8	91332–05008	PERNO BOLT	2					
9	B4G–H2501–00	LLAVE DE IGNICION COMPLT MAIN SWITCH STEERING LOCK	1					
10	B4G–H2514–00	SOPORTE DE LLAVE IGNICION STAY, MAIN SWITCH	1					
11	90149–06118	TORNILLO DE REGLAJE SCREW	2					
12	B4G–H2568–00	CUBIERTA INTERRUPTOR PRINC. COVER, MAIN SWITCH	1					
13	B9P–H255D–00	CUBIELA INTERRUPTOR PRINC.2 COVER, MAIN SWITCH 2	1					
14	90159–06178	TORNILLO CON VALONA SCREW, WITH WASHER	2					
15	21C–H2917–02	INTERRUPTOR SWITCH	1					
16	1PA–H2576–00	SENSOR ANGULO DE INCLINATION SENSOR, LEAN ANGLE	1					
17	B4G–XH250–10	LLAVE DE IGNICION COMPLT MAIN SW. STRG. LOCK SUB ASSY	1					AP AP
18	B44–H3350–00	RELE DE DESTELLADOR COMPL. FLASHER RELAY ASSY	1					
19	2GS–H3371–01	BOCINA HORN	1					
20	95827–06012	TORNILLO BOLT, FLANGE	1					
21	5US–H5110–01	REFLECTOR COMPLETO REFLECTOR ASSY	1					
22	95702–05500	TUERCA DE BRIDA NUT, FLANGE	1					

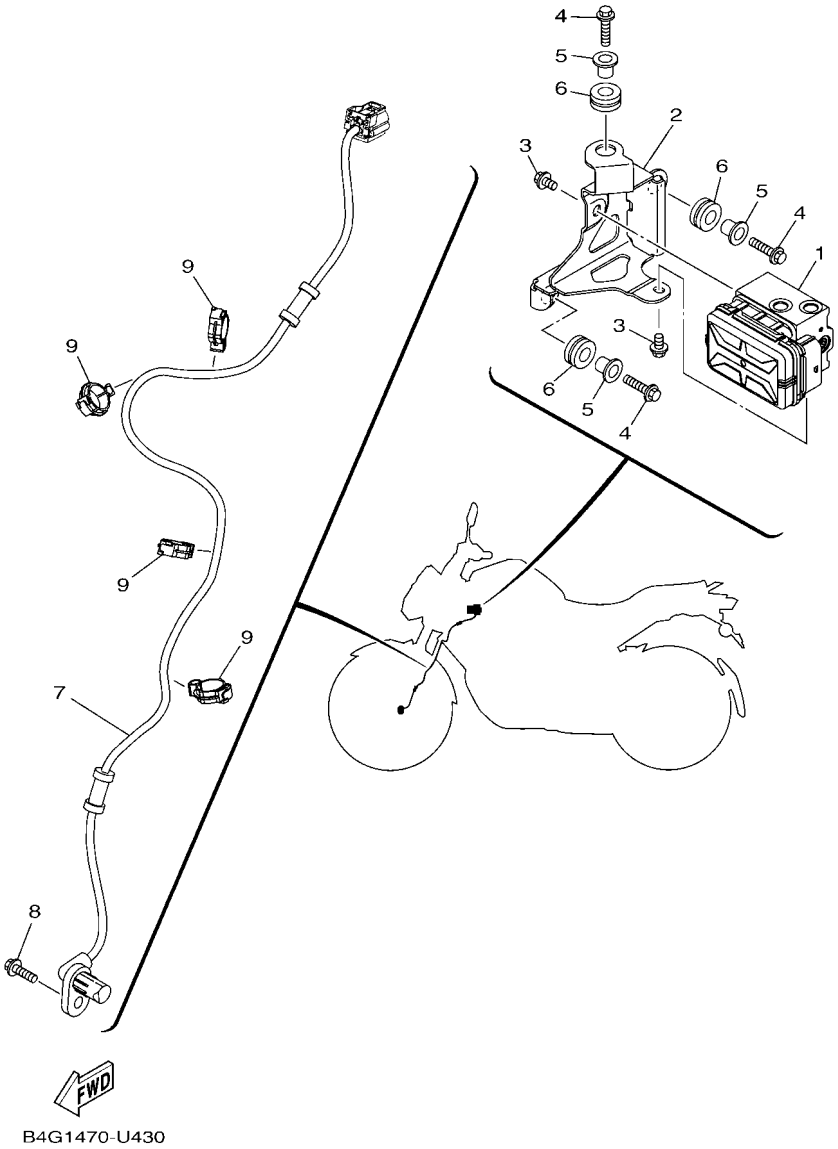

FIG. 43 EQUIPO ELECTRICO 3 — ELECTRICAL 3

REF. Nº	CODIGO Nº PART NO.	DESCRIPCION DESCRIPTION	BGB1					OBSERVACIONES REMARKS
1	B4G–H5930–09	UNIDAD DE HIDRAULICA HYDRAULIC UNIT ASSY	1					
2	B4G–F175T–00	SOPORTE 1 BRACKET 1	1					
3	95022–06010	PERNO, DE BRIDA BOLT, FLANGE	2					
4	95022–06020	PERNO, DE BRIDA BOLT, FLANGE	3					
5	90387–068N8	ESPACIADOR COLLAR	3					
6	90480–14229	TAPON GROMMET	3					
7	B9P–H5970–00	CONJUNTO DE CABLES WHEEL SENSOR ASSY, FRONT	1					
8	95022–06016	PERNO, DE BRIDA BOLT, FLANGE	1					
9	90464–14803	BRIDA CLAMP	4					

INDICE NUMERICO
NUMERICAL INDEX

CODIGO Nº PART NO.	REF. Nº
4FM–23125–40	20 – 16
	20 – 35
5XT–25802–50	27 – 5
3JD–25803–50	27 – 6
5XT–25827–00	27 – 15
3SP–25919–51	27 – 9
3SP–25924–51	27 – 13
3SP–25926–51	27 – 12
B9P–E1102–00	1 – 1
2GS–E111F–00	4 – 4
2GS–E1165–00	1 – 6
2GS–E1166–10	6 – 26
2GS–E1169–00	1 – 7
B9P–E1181–00	1 – 17
2GS–E1186–00	1 – 11
2GS–E1190–10	1 – 5
2GS–E1193–20	1 – 9
B1N–E1310–00	1 – 20
21C–E1351–10	1 – 21
B1N–E1422–00	2 – 5
2GS–E1454–01	2 – 14
54B–E1476–00	2 – 18
B9P–E1496–00	2 – 15
2GS–E1603–00	2 – 11
2GS–E1605–00	2 – 11
2GS–E1607–00	2 – 11
2GS–E1631–00	2 – 8
21C–E1633–00	2 – 9
2GS–E1636–09	2 – 8
2GS–E1638–09	2 – 8
2GS–E1651–10	2 – 4
21C–E1681–01	2 – 2
2GS–E2111–00	3 – 1
2GS–E2113–10	3 – 5
2UP–E2117–00	3 – 7
3S0–E2118–00	3 – 6
38B–E2119–00	3 – 3
2GS–E2121–00	3 – 2
2GS–E2126–00	3 – 4
1ST–E2151–00	3 – 9
21C–E2156–00	3 – 12
2GS–E2159–00	3 – 10
52S–E2169–10	3 – 8
2GS–E2170–00	4 – 1
21C–E2210–02	4 – 13
B44–E2213–00	4 – 14
21C–E2231–00	4 – 9
2GS–E2241–00	4 – 10

CODIGO Nº PART NO.	REF. Nº
2GS–E2280–00	4 – 5
1PM–E2288–01	4 – 6
2GS–E2435–10	1 – 12
21C–E2437–00	4 – 16
21C–E2661–10	1 – 22
54B–E3300–00	5 – 1
21C–E3362–00	2 – 19
4LS–E3411–00	5 – 5
21C–E3440–00	5 – 6
21C–E3447–00	5 – 7
21C–E3449–00	5 – 10
2GS–E3557–00	6 – 6
B9P–E3585–00	6 – 1
2GS–E3635–00	6 – 8
B9P–E3636–00	6 – 11
2GS–E3645–00	6 – 3
B9P–E3750–00	6 – 13
B9P–E3770–00	6 – 4
B9P–E3907–00	21 – 29
B9P–E3971–00	21 – 27
B7J–E4147–10	6 – 5
2GS–E4411–00	6 – 14
B9P–E4412–00	6 – 15
2GS–E4437–00	6 – 22
20P–E443E–00	6 – 19
2GS–E4450–00	6 – 16
2GS–E4452–00	6 – 18
B9P–E4453–00	6 – 17
21C–E4613–00	7 – 11
B9P–E4703–00	7 – 1
B4G–E4718–00	7 – 2
20P–E4747–00	7 – 10
	15 – 12
54B–E4757–00	7 – 8
21C–E4775–00	7 – 9
B4G–E4799–00	7 – 3
B1N–E5111–01	8 – 1
B1N–E5121–01	8 – 2
21C–E5155–00	8 – 3
45P–E5353–00	9 – 5
54B–E5362–00	9 – 19
2GS–E5411–10	9 – 3
B4G–E5418–00	9 – 11
B1N–E5421–00	9 – 15
21C–E5441–00	9 – 1
2GS–E5451–00	9 – 4
2GS–E5461–00	9 – 16
2GS–E5514–01	10 – 1

CODIGO Nº PART NO.	REF. Nº
21C–E5521–00	10 – 2
1PM–E5524–10	10 – 5
2GS–E5580–10	10 – 8
4LS–E5598–00	4 – 11
21C–E5666–00	12 – 29
2GS–E6111–00	11 – 1
21C–E6135–10	11 – 19
54B–E6144–00	11 – 17
B1N–E6150–00	11 – 6
21C–E6154–00	11 – 7
21C–E6193–00	11 – 3
54B–E6321–00	11 – 9
21C–E6324–00	11 – 11
21C–E6331–00	11 – 10
21C–E6333–00	11 – 13
21C–E6337–00	11 – 14
3C1–E6344–00	11 – 18
1PM–E6345–00	11 – 23
54B–E6351–00	11 – 12
21C–E6356–01	11 – 16
54B–E6357–00	11 – 24
21C–E6358–00	11 – 15
21C–E6371–00	11 – 8
21C–E6380–02	11 – 22
B1N–E7121–00	12 – 5
B1N–E7131–00	12 – 4
B1N–E7141–00	12 – 6
B1N–E7151–00	12 – 7
B1N–E7211–00	12 – 20
B1N–E7221–00	12 – 13
B1N–E7231–00	12 – 16
B1N–E7241–00	12 – 21
B1N–E7251–00	12 – 22
21C–E7258–00	12 – 19
54B–E7258–00	11 – 2
B1N–E7402–10	12 – 12
B1N–E7411–00	12 – 1
4LS–E7456–00	12 – 27
21C–E7471–00	12 – 10
21C–E8101–01	14 – 4
2GS–E8110–10	14 – 9
20P–E8113–00	14 – 10
21C–E8140–00	14 – 1
21C–E8337–00	14 – 3
21C–E8511–00	13 – 2
21C–E8512–00	13 – 3
21C–E8513–00	13 – 4
21C–E8531–00	13 – 5

CODIGO Nº PART NO.	REF. Nº
21C–E8535–00	13 – 6
2GS–E8540–10	13 – 1
B4G–F1110–00	15 – 1
B4G–F117K–00	23 – 8
2GS–F1279–00	15 – 14
B9P–F1316–00	15 – 2
2GS–F1317–00	15 – 6
B4G–F137U–00	22 – 39
B4G–F137V–00	22 – 44
B4G–F137W–00–P0	22 – 42
B4G–F137W–00–P3	22 – 42
B4G–F137W–00–P4	22 – 42
B4G–F137W–00–P5	22 – 42
B4G–F137X–00–P0	22 – 47
B4G–F137X–00–P3	22 – 47
B4G–F137X–00–P4	22 – 47
B4G–F137X–00–P5	22 – 47
2GS–F144G–10	30 – 21
B4G–F1511–00	16 – 1
B97–F1568–00	21 – 17
B9P–F1611–00	16 – 12
B4G–F1613–00	16 – 17
B4G–F1614–00	16 – 18
B4G–F163A–00	16 – 20
BGB–F1643–00	18 – 15
B4G–F1644–00	18 – 16
B4G–F1645–00	18 – 17
2GS–F1650–10	18 – 11
B4G–F1651–00	16 – 19
BK7–F1668–00	18 – 28
B4G–F1711–00	17 – 1
21C–F1717–00	17 – 5
	17 – 11
B4G–F171E–00	17 – 25
B4G–F1721–00	17 – 7
B4G–F172A–00–P0	17 – 2
B4G–F172A–00–P3	17 – 2
B4G–F172A–00–P4	17 – 2
B4G–F172A–00–P5	17 – 2
B4G–F172F–00–P0	17 – 8
B4G–F172F–00–P3	17 – 8
B4G–F172F–00–P4	17 – 8
B4G–F172F–00–P5	17 – 8
B4G–F173E–00	17 – 14
B4G–F173E–10	17 – 14
B4G–F173E–20	17 – 14
B4G–F173E–30	17 – 14
B4G–F173F–00	17 – 20

CODIGO Nº PART NO.	REF. Nº
B4G–F173F–10	17 – 20
B4G–F173F–20	17 – 20
B4G–F173F–30	17 – 20
20P–F1749–00	22 – 8
	22 – 22
	33 – 4
	33 – 10
B4G–F175T–00	43 – 2
45S–F1778–00	22 – 30
	29 – 34
B4G–F177G–00	41 – 1
20P–F2129–00	18 – 5
2GS–F2141–00	18 – 4
2GS–F2151–00	18 – 7
21C–F2174–00	26 – 22
2GS–F2210–11	18 – 22
B4G–F2327–00	18 – 14
21C–F2674–00	20 – 20
	20 – 39
B4G–F3100–00	20 – 1
2GS–F3102–00	20 – 2
B4G–F3103–00	20 – 21
21C–F3110–00	20 – 18
	20 – 37
21C–F3111–00	20 – 5
	20 – 24
21C–F3114–00	20 – 4
	20 – 23
21C–F3118–00	20 – 6
	20 – 25
B4G–F3121–00	38 – 11
B4G–F3122–00–P2	38 – 16
B4G–F3122–00–P3	38 – 16
B4G–F3122–00–P4	38 – 16
B4G–F3122–00–P5	38 – 16
21C–F3126–11	20 – 3
B4G–F3132–00–P2	38 – 19
B4G–F3132–00–P3	38 – 19
B4G–F3132–00–P4	38 – 19
B4G–F3132–00–P5	38 – 19
B9E–F3136–00	20 – 22
21C–F3141–00	20 – 8
	20 – 27
2GS–F3144–00	20 – 12
	20 – 31
2GS–F3145–00	20 – 14
	20 – 33
21C–F3146–00	20 – 15

CODIGO Nº PART NO.	REF. Nº
21C–F3146–00	20 – 34
21C–F3149–00	20 – 7
	20 – 26
21C–F3156–00	20 – 13
	20 – 32
21C–F3158–00	20 – 10
	20 – 29
2GS–F3170–00	20 – 17
	20 – 36
2GS–F3171–00	20 – 19
	20 – 38
21C–F3173–00	20 – 11
	20 – 30
B4G–F3175–00	38 – 8
B4G–F317E–00	19 – 14
B4G–F317F–00	19 – 15
21C–F317J–00	19 – 16
21C–F3181–00	20 – 9
	20 – 28
B4G–F3317–00	25 – 18
21C–F3340–00	20 – 40
21C–F3346–00	20 – 43
2GS–F339E–00	20 – 44
21C–F3411–00	20 – 42
21C–F3412–00	19 – 1
5YY–F3416–00	19 – 4
20P–F3418–00	19 – 6
4LS–F341E–10	19 – 3
B4G–F3435–00	19 – 8
B97–F3441–00	19 – 12
B97–F3441–10	19 – 12
5YY–F3462–00	20 – 41
B4G–F4110–00	21 – 1
B4G–F411H–00	22 – 29
B4G–F4124–00	22 – 33
B4G–F413B–00	22 – 3
	22 – 17
B4G–F414A–00	21 – 19
2GS–F414G–00	21 – 32
2GS–F4170–00	21 – 34
2GS–F4170–20	21 – 34
2GS–F4180–00	21 – 37
21C–F4181–00	21 – 2
21C–F4183–00	21 – 4
B97–F4188–00	21 – 14
B4G–F4191–00	21 – 8
2GS–F419A–00	21 – 38
B4G–F4246–00	22 – 2

INDICE NUMERICO
NUMERICAL INDEX

CODIGO Nº PART NO.	REF. Nº
B4G–F4246–10	22 – 2
B4G–F4246–20	22 – 2
B4G–F4246–30	22 – 2
B4G–F4247–00	22 – 16
B4G–F4247–10	22 – 16
B4G–F4247–20	22 – 16
B4G–F4247–30	22 – 16
B4G–F4313–00	21 – 40
2GS–F4314–00	21 – 41
2GS–F4315–00	21 – 42
2GS–F4364–00	22 – 36
B7J–F4491–00	21 – 31
B4G–F4549–00	21 – 16
BC4–F4595–00	20 – 45
21C–F4614–00–P0	21 – 23
B4G–F4730–00	23 – 1
1PM–F4741–00	15 – 15
	23 – 2
4LS–F4741–00	23 – 3
B4G–F4773–00	23 – 9
21C–F4780–01	23 – 4
B4G–F478E–00	23 – 6
21C–F510C–10	24 – 2
B9E–F5168–00–33	24 – 1
B9E–F517G–00	24 – 7
21C–F5181–00	24 – 10
1CK–F5186–00	24 – 9
B97–F530S–00	26 – 2
B4G–F531B–00	24 – 13
	26 – 25
B4G–F531B–10	24 – 13
	26 – 25
B4G–F531B–20	24 – 13
	26 – 25
B97–F5338–01–33	26 – 1
B97–F5364–00	26 – 5
B97–F5366–00	26 – 6
B97–F5376–00	26 – 8
B97–F5377–00	26 – 16
21C–F5381–00	26 – 15
B97–F5383–00	26 – 17
21C–F5388–11	26 – 21
2GS–F5441–10	26 – 10
B97–F5806–00	27 – 4
2DP–F5807–10	29 – 2
B97–F5808–00	32 – 3
B9E–F580A–00	29 – 1
B97–F580E–00	32 – 1

CODIGO Nº PART NO.	REF. Nº
B9E–F580U–00	25 – 3
B97–F580W–00	27 – 3
5HH–F5824–00	27 – 10
5HH–F5825–51	27 – 14
4ML–F582A–50	32 – 6
B97–F582U–00	25 – 1
B97–F582W–00	27 – 1
B97–F583V–00	32 – 2
3GM–F5852–00	29 – 3
54C–F5852–00	32 – 12
20P–F5854–00	32 – 14
55U–F5854–00	29 – 5
20P–F585B–00	32 – 13
3GM–F585B–00	29 – 4
2VN–F5866–00	32 – 7
18D–F5867–00	29 – 10
B4G–F5872–00	29 – 14
B4G–F5873–00	32 – 23
B4G–F5874–00	29 – 22
B4G–F5875–00	29 – 28
B4G–F5876–00	29 – 30
B4G–F587A–00	29 – 19
B9P–F5887–00	29 – 32
20P–F5894–00	32 – 11
20P–F5895–00	32 – 17
3FV–F589A–00	32 – 9
2DP–F589F–00	29 – 8
54B–F5914–00	25 – 10
5HH–F5914–00	27 – 11
54B–F5916–00	25 – 16
54B–F5917–00	25 – 8
5HH–F5917–00	27 – 8
54B–F5919–00	25 – 12
54B–F5924–00	25 – 14
54B–F5925–00	25 – 15
54B–F5926–00	25 – 11
54B–F5937–00	25 – 7
5HH–F5937–00	27 – 7
54B–F5939–00	25 – 9
B4G–F6111–00	28 – 1
B4G–F6131–00	29 – 20
21C–F620B–40	28 – 12
B1N–F6240–00	28 – 11
B1N–F6241–00	28 – 10
B97–F6280–00	40 – 1
B4G–F6281–00	28 – 3
B4G–F6282–00	28 – 4
B97–F6290–00	40 – 2

CODIGO Nº PART NO.	REF. Nº
B4G–F6311–00	28 – 2
5HH–F6332–00	29 – 11
B4G–F6335–00	28 – 6
4TL–F6372–00	28 – 7
45S–F7111–00	31 – 1
21C–F7114–00	31 – 4
B97–F7211–00	30 – 23
2YK–F7222–00	32 – 5
4TT–F7238–00	32 – 10
21C–F7261–00	30 – 9
2GS–F7262–00	30 – 24
21C–F7311–10	31 – 7
21C–F7413–01	30 – 6
	30 – 18
B4G–F7414–00	30 – 11
B4G–F7424–00	30 – 27
20P–F7431–00	31 – 14
20P–F7441–00	31 – 15
35B–F7451–00	30 – 1
B4G–F7452–00	30 – 2
35B–F7461–00	30 – 13
B4G–F7462–00	30 – 14
B77–F8100–10	23 – 13
4UU–F811G–00	23 – 12
B4G–F836B–00	37 – 9
B4G–F836K–00	22 – 10
B4G–F836L–00	22 – 24
B9P–F837D–00	33 – 13
B4G–F837N–00	22 – 14
B4G–F837R–00	22 – 28
B9P–F8385–00–P0	33 – 1
B9P–F8395–00–P0	33 – 7
B4G–F8396–00	22 – 11
B4G–F8397–00	22 – 25
B9E–F843G–00	16 – 3
	16 – 5
2GS–H1410–00	34 – 2
2GS–H1450–00	34 – 1
2GS–H1800–10	35 – 1
2SP–H1801–10	35 – 2
2SP–H1828–10	35 – 5
2SP–H1834–10	35 – 4
2GS–H183G–00	35 – 3
54B–H1940–01	42 – 7
B4G–H1950–00	42 – 6
2GS–H1960–10	41 – 12
B1P–H2100–00	41 – 9
B4G–H2116–00	41 – 10

CODIGO Nº PART NO.	REF. Nº
5YY–H2131–10	41 – 11
20P–H2133–00	36 – 9
	36 – 18
	36 – 27
	36 – 36
20P–H213A–00	36 – 7
	36 – 16
	36 – 25
	36 – 34
B4G–H2151–00	41 – 16
B4G–H2151–30	41 – 17
B9P–H2310–00	41 – 4
B4G–H2370–00	41 – 6
B4G–H2501–00	42 – 9
B4G–H2514–00	42 – 10
B97–H2530–00	41 – 14
21C–H2540–00	42 – 1
B9P–H255D–00	42 – 13
B4G–H2568–00	42 – 12
1PA–H2576–00	42 – 16
B9P–H2590–00	41 – 15
B9P–H2590–20	41 – 15
B4G–H2599–00	41 – 20
5YY–H2911–02	40 – 5
21C–H2917–02	42 – 15
B4G–H3310–00	36 – 1
2FB–H3311–00	36 – 3
	36 – 12
	36 – 21
	36 – 30
20P–H3318–00	36 – 22
	36 – 31
BR2–H3318–00	36 – 4
	36 – 13
5YY–H3318–10	36 – 37
BR2–H331E–00	36 – 5
B4G–H3320–00	36 – 10
BR2–H332E–00	36 – 14
B4G–H3330–00	36 – 19
20P–H3333–00	36 – 8
	36 – 17
	36 – 26
	36 – 35
B1P–H333A–00	36 – 2
	36 – 29
2GS–H333E–00	36 – 23
B4G–H3340–00	36 – 28
B1P–H334A–00	36 – 11

CODIGO Nº PART NO.	REF. Nº
B1P–H334A–00	36 – 20
2GS–H334E–00	36 – 32
B44–H3350–00	42 – 18
2GS–H3371–01	42 – 19
B4G–H3500–11	37 – 1
B8T–H3500–11	37 – 1
B7J–H3591–00	42 – 3
20P–H3618–00	36 – 6
	36 – 15
	36 – 24
	36 – 33
21C–H3912–01	40 – 6
B9E–H3922–00	29 – 7
36L–H3936–00	40 – 11
36L–H3945–10	40 – 7
B97–H3972–00	40 – 3
B4G–H3975–00	40 – 4
2LP–H3980–10	29 – 12
B4G–H4300–00	38 – 1
B4G–H4312–00	38 – 3
2LP–H4347–00	38 – 2
B4G–H4710–00	39 – 1
1GC–H4714–00	39 – 4
B4G–H4721–00	39 – 2
2GS–H4723–00	39 – 3
5US–H5110–01	42 – 21
B9P–H5546–00	41 – 8
B9P–H5752–00	21 – 30
B9P–H591A–00	41 – 7
B9P–H592A–00	42 – 5
B4G–H5930–09	43 – 1
B9P–H5970–00	43 – 7
B97–W0045–00	25 – 13
54B–W0047–00	25 – 5
54B–W0048–00	25 – 6
54B–W0057–00	25 – 4
B1N–WE140–09	2 – 1
B9P–WE153–00	2 – 12
B4G–WF211–10	18 – 1
21C–WF461–40	21 – 26
1GC–WF479–00	23 – 7
B4G–XF155–00–P0	16 – 2
B4G–XF155–00–P1	16 – 2
B4G–XF15B–00–P0	16 – 4
B4G–XF15B–00–P1	16 – 4
B4G–XF173–00–P2	17 – 13
B4G–XF173–00–P5	17 – 13
B4G–XF173–10–P3	17 – 13

CODIGO Nº PART NO.	REF. Nº
B4G–XF173–20–P4	17 – 13
B4G–XF174–00–P2	17 – 19
B4G–XF174–00–P5	17 – 19
B4G–XF174–10–P3	17 – 19
B4G–XF174–20–P4	17 – 19
B4G–XF17D–00	21 – 15
B4G–XF412–00–P2	22 – 1
B4G–XF412–00–P5	22 – 1
B4G–XF412–10–P3	22 – 1
B4G–XF412–20–P4	22 – 1
B4G–XF413–00–P2	22 – 15
B4G–XF413–00–P5	22 – 15
B4G–XF413–10–P3	22 – 15
B4G–XF413–20–P4	22 – 15
B4G–XH250–10	42 – 17
B4G–XH355–00	37 – 8
90101–10812	31 – 10
90105–06169	21 – 12
90105–068C6	16 – 15
90105–08002	15 – 7
90105–08196	4 – 7
90105–08273	1 – 15
90105–10319	25 – 17
90105–10861	15 – 4
	15 – 11
90105–12057	18 – 24
90105–12804	18 – 25
90109–06259	14 – 2
90109–06887	21 – 21
90109–068C2	18 – 18
90109–08202	30 – 8
	30 – 20
90110–06256	1 – 24
90110–06304	1 – 19
90110–06393	4 – 15
90111–05034	37 – 6
90111–05035	5 – 2
90111–06807	7 – 6
90111–06864	7 – 7
90111–06868	16 – 11
90111–08029	25 – 2
	27 – 2
90116–08826	26 – 11
90119–06137	17 – 18
	17 – 24
90123–08046	28 – 8
90149–05030	24 – 8
90149–05807	1 – 8

INDICE NUMERICO
NUMERICAL INDEX

CODIGO Nº PART NO.	REF. Nº
90149–06118	42 – 11
90149–06829	4 – 12
	16 – 21
	33 – 3
	33 – 9
	33 – 14
90159–05065	21 – 24
90159–06178	42 – 14
90159–06844	32 – 22
90160–05808	21 – 18
	22 – 5
	22 – 19
90160–05812	38 – 17
	38 – 20
90170–05302	3 – 11
90170–10012	2 – 25
90176–22081	19 – 11
90179–05804	21 – 25
	37 – 5
90179–08148	28 – 9
90179–08674	15 – 9
90179–10819	15 – 5
90179–12810	11 – 5
90179–14001	11 – 20
90179–25615	19 – 5
90183–05807	17 – 3
	17 – 9
	17 – 16
	17 – 22
	21 – 22
	22 – 6
	22 – 20
	22 – 43
	22 – 48
	33 – 18
	38 – 13
	38 – 18
	38 – 21
90183–06800	16 – 22
	38 – 7
	38 – 9
90185–10804	31 – 13
90185–12805	18 – 6
90185–14800	24 – 11
	26 – 18
90201–05036	37 – 4
	39 – 7
90201–05820	1 – 23

CODIGO Nº PART NO.	REF. Nº
90201–06086	18 – 9
90201–060A3	21 – 9
90201–06380	21 – 10
90201–06871	14 – 13
90201–08066	32 – 19
90201–08834	40 – 10
90201–08880	7 – 13
90201–08881	7 – 17
90201–10118	29 – 16
	29 – 18
	29 – 24
	29 – 26
90201–10128	42 – 4
90201–105E8	10 – 3
90201–10841	30 – 10
	31 – 12
90201–10844	32 – 25
90201–122H1	18 – 27
90201–12836	11 – 4
	34 – 6
90201–15022	2 – 16
90201–15814	26 – 19
90201–178D3	12 – 18
	12 – 30
90201–22018	19 – 10
90201–22793	12 – 14
90201–25290	10 – 7
90202–26142	19 – 7
90208–20003	11 – 21
90209–17285	12 – 2
90209–18208	12 – 17
90214–10006	2 – 17
90215–10803	2 – 24
90240–08005	32 – 18
90252–18800	14 – 11
	32 – 20
90252–22800	30 – 5
	30 – 17
	31 – 17
90269–06813	22 – 13
	22 – 27
90269–06816	17 – 6
	17 – 12
90280–03017	2 – 7
90282–05031	2 – 23
90338–30802	9 – 22
90340–12808	5 – 3
90340–14117	9 – 9

CODIGO Nº PART NO.	REF. Nº
90387–06048	16 – 14
	16 – 24
	21 – 36
	22 – 34
90387–066J9	18 – 8
90387–06737	6 – 23
90387–068B2	21 – 6
90387–068C2	33 – 15
90387–068C5	16 – 6
90387–068C9	9 – 13
90387–068D4	38 – 5
90387–068N2	17 – 27
	38 – 15
90387–068N8	43 – 5
90387–068S1	18 – 12
	41 – 3
90387–068S5	16 – 9
90387–07819	19 – 18
90387–08079	16 – 16
90387–087L0	7 – 5
90387–08822	15 – 13
90387–09806	6 – 24
90387–10003	31 – 11
90387–107H6	21 – 7
90387–10822	31 – 2
90387–12845	18 – 23
90387–12863	18 – 2
90387–15840	2 – 20
90387–20813	2 – 13
90401–10824	32 – 24
90401–10826	29 – 15
	29 – 23
90401–10827	29 – 17
	29 – 25
90430–06817	1 – 3
	1 – 14
90430–10148	42 – 2
90430–12227	5 – 4
90445–10837	21 – 39
90445–13806	31 – 9
90445–14811	21 – 20
90450–43808	6 – 9
90450–48807	6 – 10
90464–14803	43 – 9
90464–16006	21 – 28
	21 – 43
	22 – 32
	29 – 33

CODIGO Nº PART NO.	REF. Nº
90464–16061	36 – 38
	41 – 18
90464–17003	32 – 26
90464–50800	41 – 19
90464–80802	21 – 5
90467–09006	21 – 44
90467–100A1	21 – 45
90467–12085	32 – 16
90467–12800	6 – 20
90467–13816	6 – 27
90467–15012	6 – 28
90480–01558	18 – 21
	33 – 2
	33 – 8
	39 – 9
90480–01559	17 – 15
	17 – 21
	22 – 4
	22 – 18
90480–01811	22 – 9
	22 – 23
	33 – 5
	33 – 11
90480–08801	16 – 7
90480–12812	7 – 4
	9 – 14
90480–12824	16 – 10
90480–14003	33 – 16
90480–14101	38 – 4
90480–14229	43 – 6
90480–14818	37 – 2
90480–14819	39 – 8
90480–15363	21 – 3
	21 – 46
90501–06800	13 – 7
90501–12743	31 – 18
90506–23807	31 – 8
90506–29807	30 – 26
90506–35816	31 – 3
90508–183B9	30 – 3
	30 – 15
90508–32805	14 – 5
90520–02845	21 – 47
90520–03829	21 – 48
90520–08813	21 – 49
90560–08251	18 – 20
91312–05016	3 – 13
91312–06014	4 – 17

CODIGO Nº PART NO.	REF. Nº
91312–06014	9 – 2
	34 – 4
91312–06020	10 – 9
	30 – 25
	35 – 6
91312–06025	6 – 2
91312–06030	34 – 3
91332–05008	42 – 8
91332–05010	21 – 33
91701–08035	31 – 16
91701–08040	30 – 4
	30 – 16
91810–14804	1 – 18
91830–21014	8 – 4
	9 – 6
	9 – 17
92012–06025	6 – 12
92012–08020	32 – 21
92902–05200	37 – 7
92902–06200	14 – 12
92902–08200	23 – 11
92902–08600	26 – 23
92907–14200	24 – 12
93101–10838	9 – 21
93102–12875	14 – 8
93102–12877	11 – 27
93102–22818	12 – 25
93106–22808	24 – 3
	26 – 4
93106–26801	26 – 9
93210–14899	9 – 10
93210–15620	32 – 8
93210–19809	9 – 20
93210–29807	35 – 7
93306–002XJ	4 – 3
93306–054Y6	12 – 8
93306–054YA	26 – 7
93306–054YE	12 – 8
93306–201Y4	12 – 9
93306–202XT	24 – 4
	26 – 3
93306–202YD	2 – 21
93306–203XR	12 – 23
93306–203XS	2 – 22
93306–252XG	24 – 4
	26 – 3
93306–272X1	12 – 24
93306–272X4	12 – 24

CODIGO Nº PART NO.	REF. Nº
93306–355Y6	2 – 6
93310–325X3	10 – 6
93310–628X0	2 – 3
93315–112Y9	11 – 26
93317–318Y5	18 – 3
93399–99949	19 – 2
93410–20809	12 – 3
93410–22039	12 – 15
93450–16812	2 – 10
93501–04805	31 – 19
93505–16844	11 – 25
93605–06800	4 – 2
93608–43238	14 – 7
93822–14800	12 – 26
93900–00824	24 – 6
	26 – 14
94110–17818	24 – 5
94110–17824	24 – 5
94114–17801	26 – 13
94114–17807	26 – 13
94568–G2096	4 – 8
94568–K3128	26 – 20
94568–K6128	26 – 20
94703–00885	1 – 16
95022–06010	12 – 28
	23 – 5
	43 – 3
95022–06012	1 – 2
95022–06016	17 – 26
	18 – 10
	18 – 13
	41 – 2
	43 – 8
95022–06020	5 – 8
	43 – 4
95022–06025	1 – 10
	1 – 13
	29 – 27
95022–06040	9 – 7
	9 – 18
95022–06045	8 – 6
95022–06050	9 – 8
95022–06055	8 – 5
95022–06065	5 – 9
95022–06070	8 – 7
95022–08035	19 – 13
95022–08040	19 – 9
95027–06012	18 – 19

CODIGO Nº PART NO.	REF. Nº
95302–08600	26 – 24
95302–08700	32 – 4
95602–06100	29 – 9
95602–08200	26 – 12
95602–10200	31 – 5
95612–08635	1 – 4
95612–12100	18 – 26
95702–05500	42 – 22
95702–08500	7 – 12
95707–06300	40 – 8
95707–12500	34 – 5
95802–06010	8 – 8
95802–06012	30 – 22
95802–06020	9 – 12
95802–06025	41 – 13
95802–08025	7 – 14
95812–06012	19 – 19
	22 – 31
	29 – 21
	29 – 29
	29 – 31
	29 – 35
95812–06030	6 – 7
95812–08016	15 – 8
95812–08025	23 – 10
	30 – 12
	30 – 28
95812–08035	7 – 15
95812–08040	7 – 16
95812–10035	31 – 6
95812–10080	15 – 3
95817–10130	15 – 10
95822–06016	6 – 25
	19 – 17
	38 – 10
	38 – 14
95822–06020	16 – 8
	22 – 7
	22 – 21
95822–06030	21 – 13
95827–06012	22 – 35
	42 – 20
95827–06025	38 – 6
97012–06014	16 – 13
	16 – 23
	21 – 11
	21 – 35
97012–06020	14 – 14

CODIGO Nº PART NO.	REF. Nº
97502–05520	41 – 5
9750M–06425	40 – 9
97602–04312	29 – 13
97602–05320	6 – 21
97702–40512	39 – 5
97702–50012	17 – 4
	17 – 10
	17 – 17
	17 – 23
	22 – 37
	22 – 40
	22 – 45
	38 – 12
97702–50014	37 – 3
97702–50016	33 – 6
	33 – 12
	33 – 17
	39 – 6
97707–50012	22 – 38
	22 – 41
	22 – 46
97707–50016	22 – 12
	22 – 26
98502–05014	30 – 7
	30 – 19
98502–06012	12 – 11
98507–05040	28 – 5
98707–04012	29 – 6
98707–04045	32 – 15
99001–10600	14 – 6
99009–10400	10 – 4
99009–17400	12 – 31
99009–20500	11 – 28

CODIGO Nº PART NO.	REF. Nº

CODIGO Nº PART NO.	REF. Nº

CODIGO Nº PART NO.	REF. Nº

CODIGO Nº PART NO.	REF. Nº